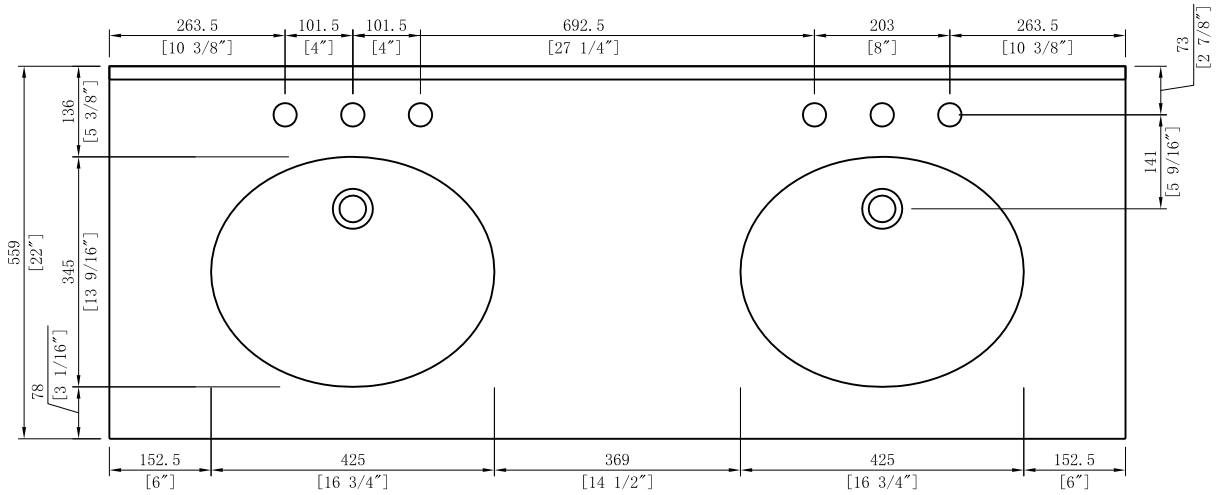
263.5
[10 3/8"]
101.5
[4"]
101.5
[4"]
692.5
[27 1/4"]
203
[8"]
263.5
[10 3/8"]
73
[2 7/8"]
136
[5 3/8"]
141
[5 9/16"]
559
[22"]
345
[13 9/16"]
78
[3 1/16"]
152.5
[6"]
425
[16 3/4"]
369
[14 1/2"]
425
[16 3/4"]
152.5
[6"]

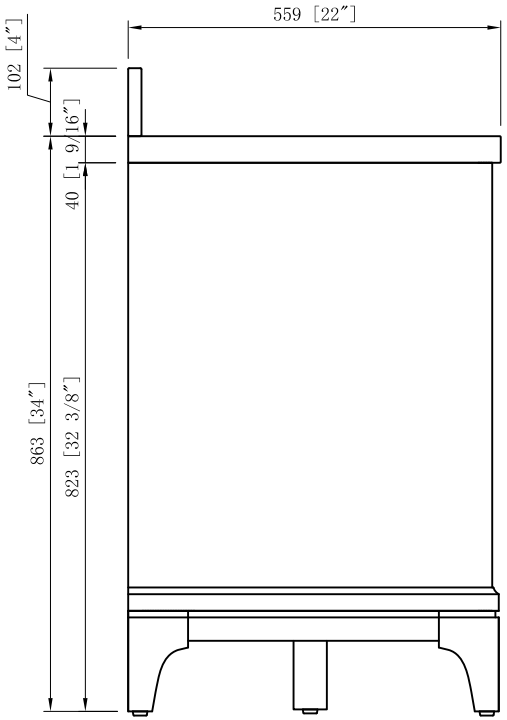
559 [22"]
102 [4"]
40 [1 9/16"]
863 [34"]
823 [32 3/8"]

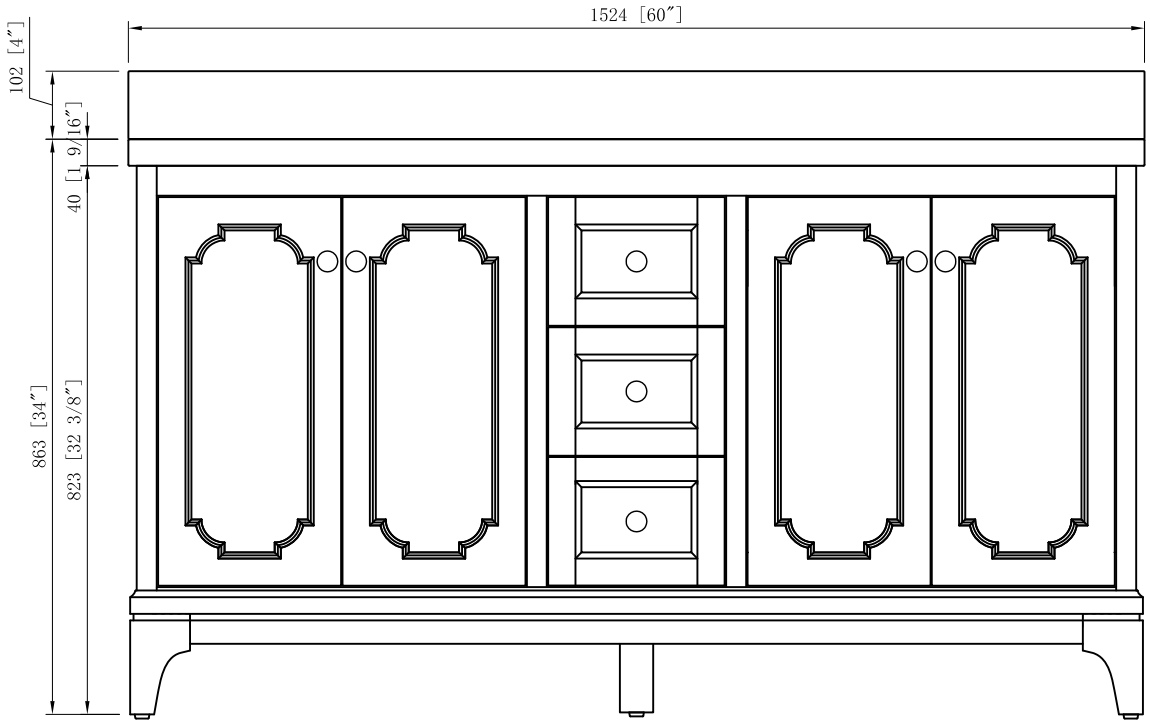
1524 [60"]
102 [4"]
40 [1 9/16"]
863 [34"]
823 [32 3/8"]

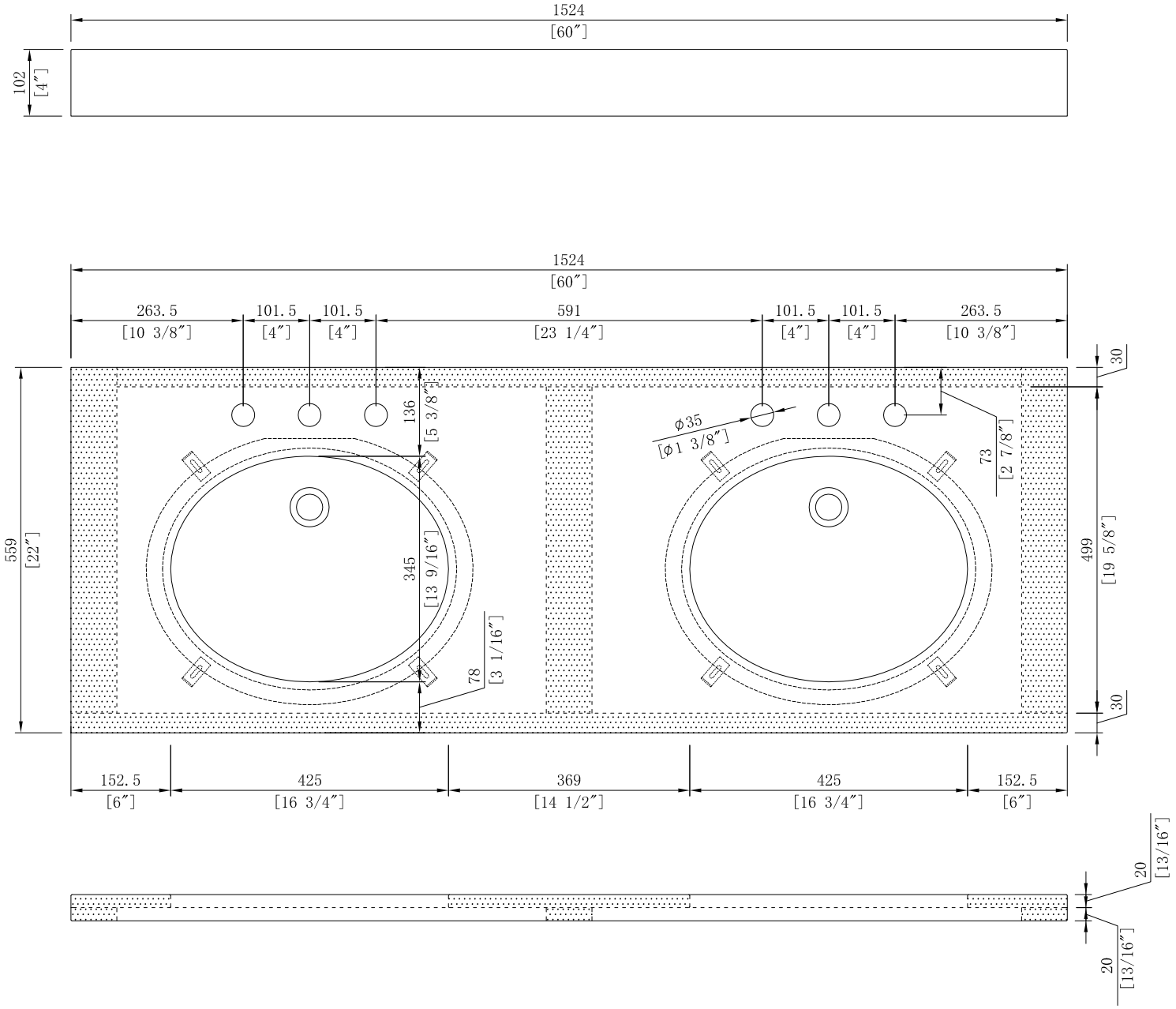
1524
[60″]
102
[4″]
1524
[60″]
263.5
[10 3/8″]
101.5
[4″]
101.5
[4″]
591
[23 1/4″]
101.5
[4″]
101.5
[4″]
263.5
[10 3/8″]
30
136
[5 3/8″]
ϕ35
[ϕ1 3/8″]
73
[2 7/8″]
559
[22″]
345
[13 9/16″]
499
[19 5/8″]
78
[3 1/16″]
30
152.5
[6″]
425
[16 3/4″]
369
[14 1/2″]
425
[16 3/4″]
152.5
[6″]
20
[13/16″]
20
[13/16″]

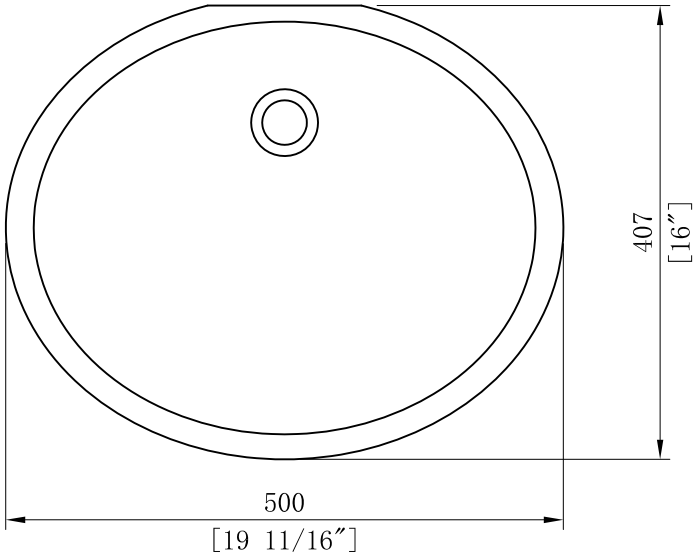
407
[16″]
500
[19 11/16″]

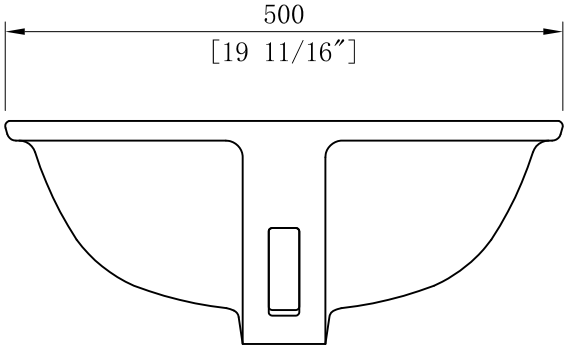
500
[19 11/16″]

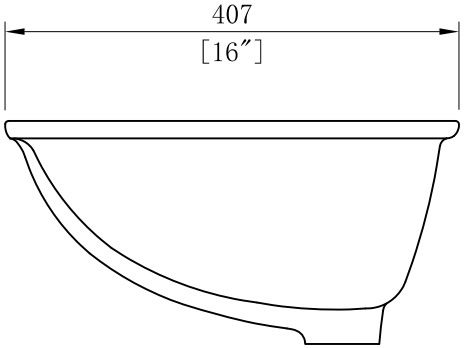
407
[16″]

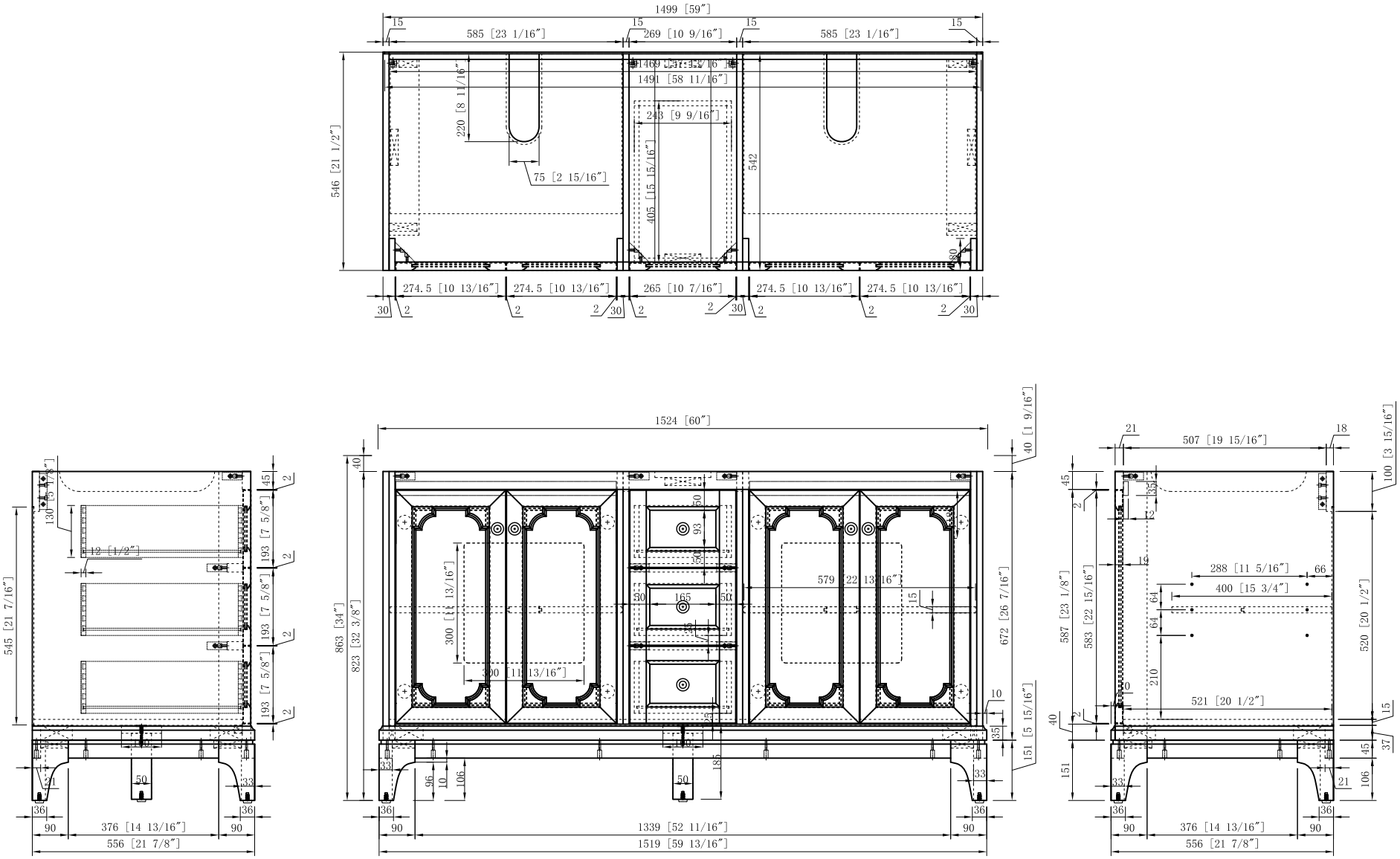
1499 [59″]
585 [23 1/16″]
269 [10 9/16″]
585 [23 1/16″]
1491 [58 11/16″]
243 [9 9/16″]
220 [8 11/16″]
75 [2 15/16″]
546 [21 1/2″]
405 [15 15/16″]
542
274.5 [10 13/16″]
265 [10 7/16″]
1524 [60″]
40 [1 9/16″]
863 [34″]
823 [32 3/8″]
672 [26 7/16″]
151 [5 15/16″]
579 [22 13/16″]
300 [11 13/16″]
545 [21 7/16″]
130 [5 1/8″]
12 [1/2″]
193 [7 5/8″]
1339 [52 11/16″]
1519 [59 13/16″]
376 [14 13/16″]
556 [21 7/8″]
507 [19 15/16″]
100 [3 15/16″]
587 [23 1/8″]
583 [22 15/16″]
520 [20 1/2″]
288 [11 5/16″]
400 [15 3/4″]
521 [20 1/2″]