GKB231,2,8
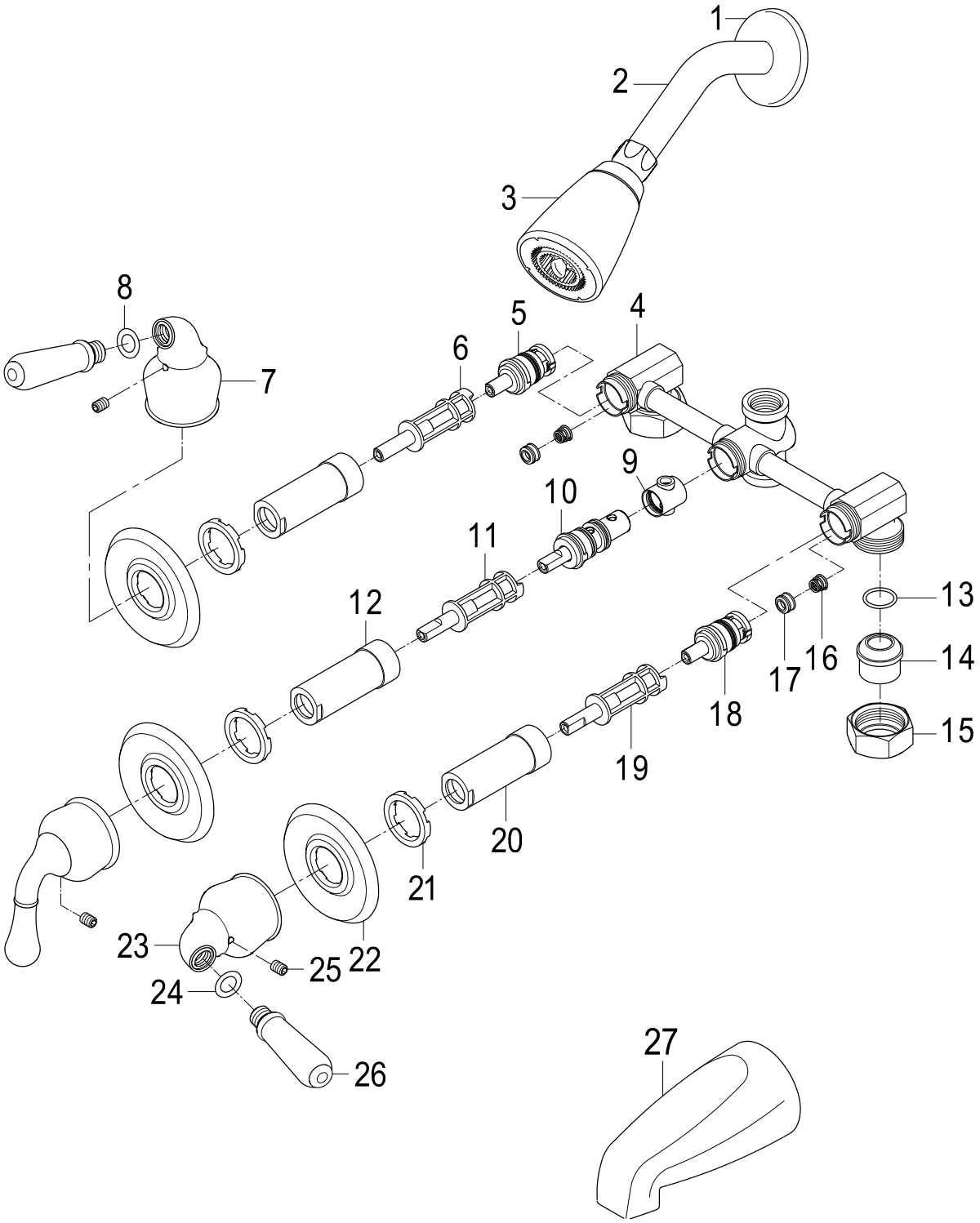
Three Handles Tub & Shower Faucet