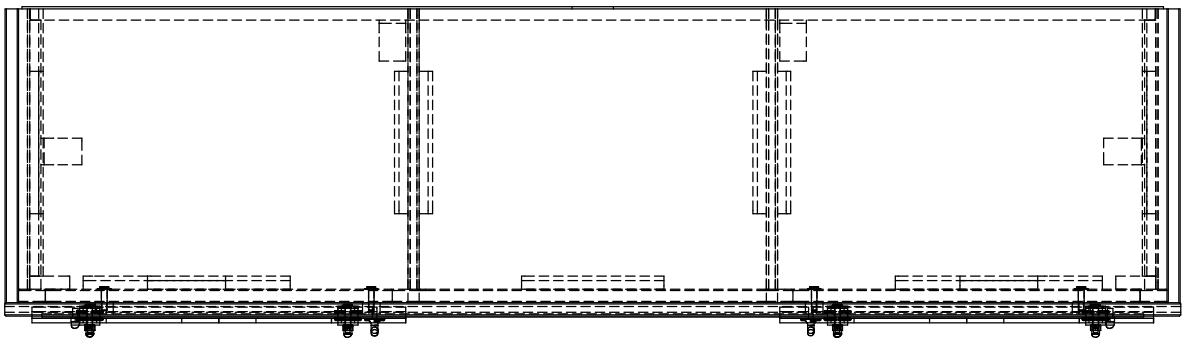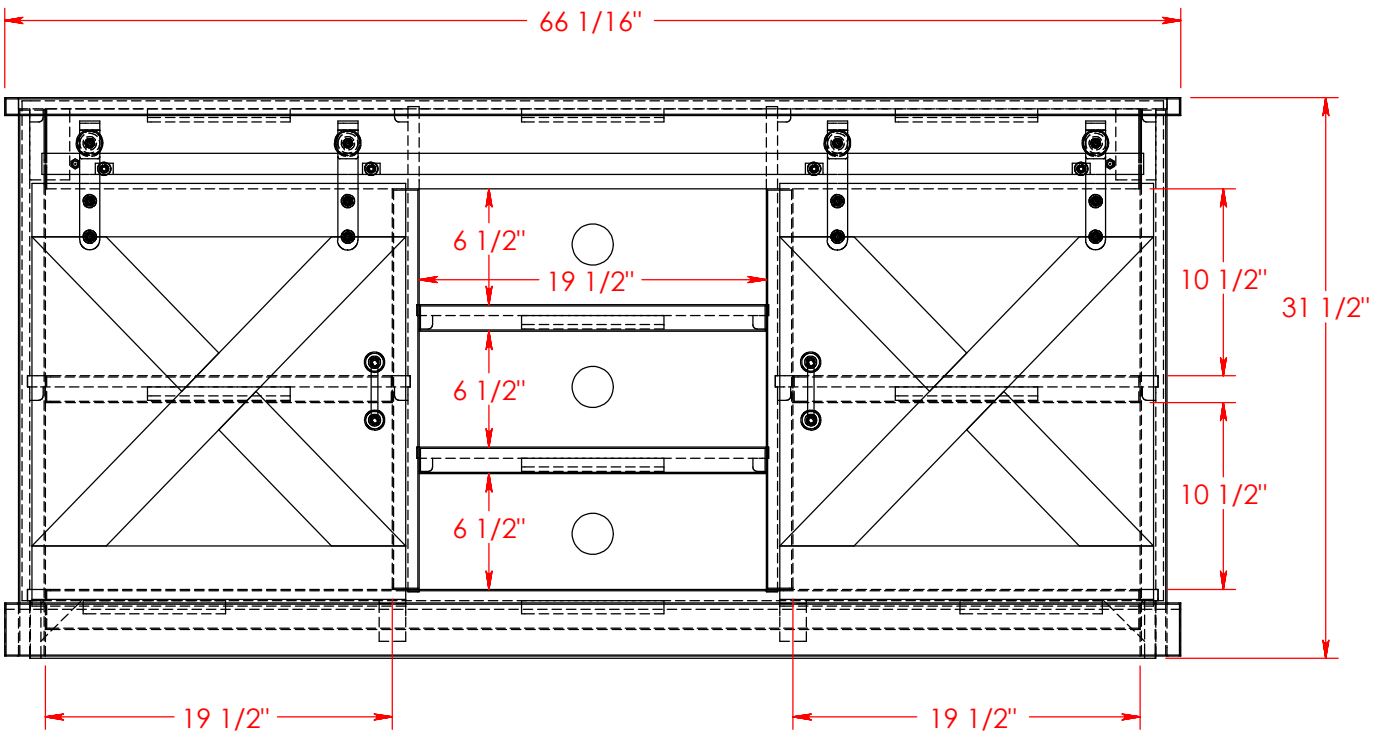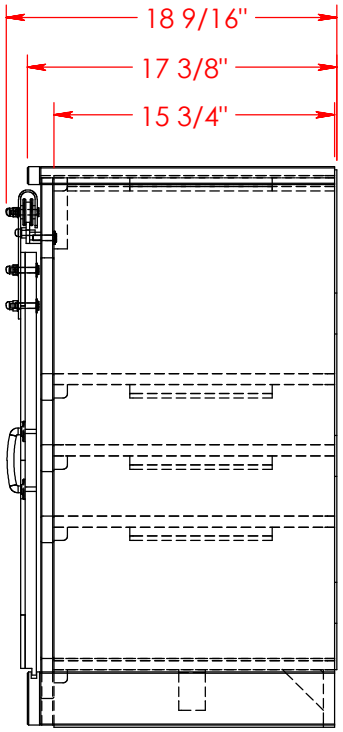	Part #	Part Description:	TV Console		Date:
	Material: Assembly	Width: 66 1/16"	Height: 31 1/2"	Depth: 17 3/8"	Drawn By: dhoffmann