FORIOUS

# Specifications

## Faucet Dimensions

Overall : 6.1″ H x 6.1″ W

## Features

- Primary Material: Stainless Steel
- Water Resistant
- Rust Resistant
- Tarnish Resistant
- Single Post

## Accessories Included

- Clamp
- Spring
- Screws x 2

## Available Finishes

- Chrome
- Black
- Brushed Nickel
- White

## Warranty

FORIOUS Full Lifetime Warranty

## FORIOUS Customer Service

service@forious.com

**Recessed Toilet Paper Holder**
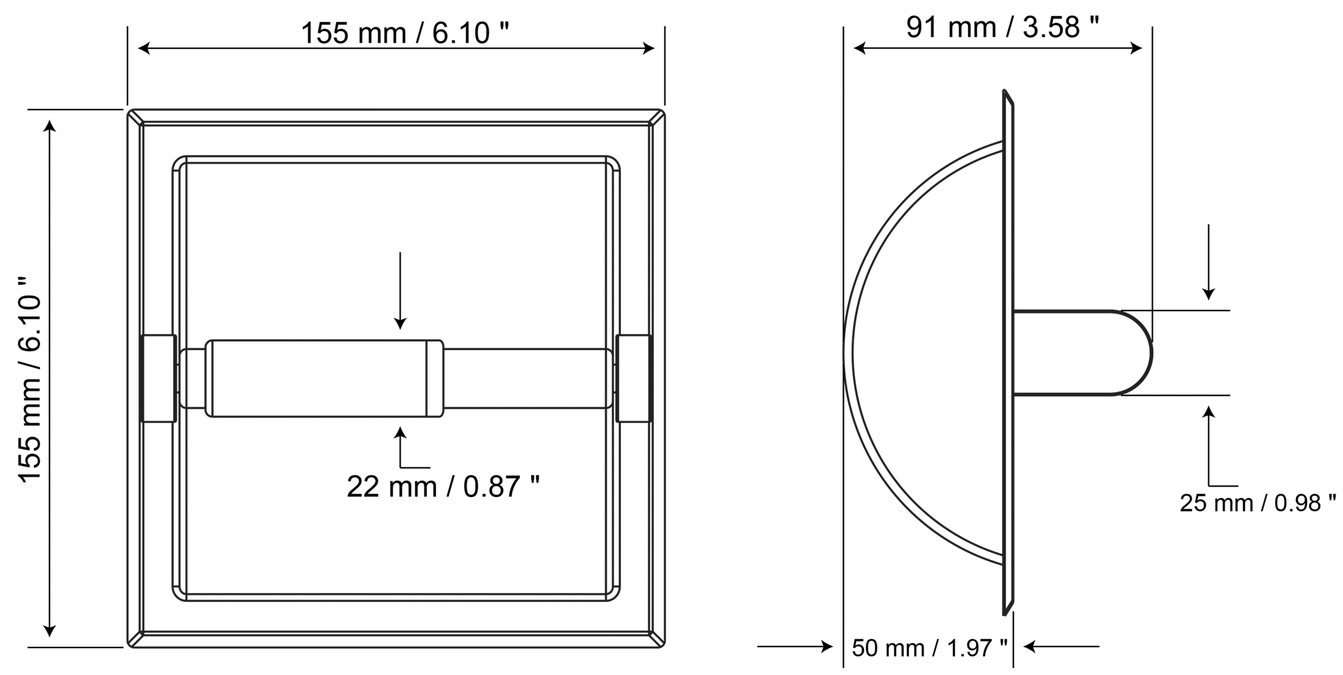
**Models:** WW0204