MODEL#: **DT0072PL**
PRODUCT SPECIFICATION SHEET

Elements Of Design

MODEL SHOWN: DT0072PL

Note: Photo above and Drawing below shows overall style of the product, handle styles may be different to the product model number this specification sheet is refering to

DESCRIPTION:

Leg Tub Filler w/ Hand Shower, 3-3/8" Spread

WATER FLOW RATE (If applicable):

2.4 GPM (9 LPM) Max @ 60 PSI

AVAILABLE FINISHES:

Chrome, Polished Brass, Dark Bronze, Satin Nickel

CARTRIDGES (If applicable):

CARTRIDGE TYPE	MODEL #
Hot Cartridge	KSRPT1000HC
Cold Cartridge	KSRPT1000CC
Shared or Single H&C Cartridge	Not Applicable
Diverter (If applicable)	KBRPT1000DC

Note: Please always check with Elements of Design Customer Service for Cartridge Model Number Verification before you order.

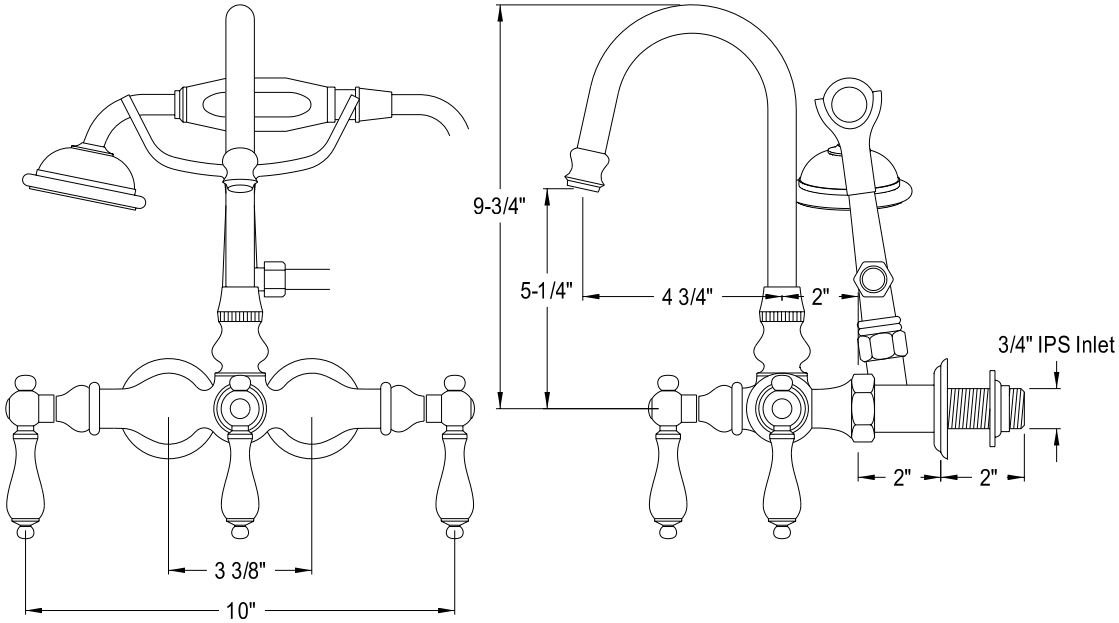

T 909.465.6687 F 909.548.0668