ITEM NO.	DESCRIPTION	QTY.
1	BACK PLATE	1
2	HUB	5
3	TUBE	2
4	END CAP	1
5	CONNECTOR	1
6	END LOCK	1
7	SWING SUPPORT	1
8	SWING TUBE	1
9	LOCK	2
10	END BALL	2
11	MIRROR RING OUTSIDE	1
12	MIRROR RING INSIDE	1
13	MIRROR	1
14	HEX LOCK	2
15	RING	4
16	CHECKING RING	1

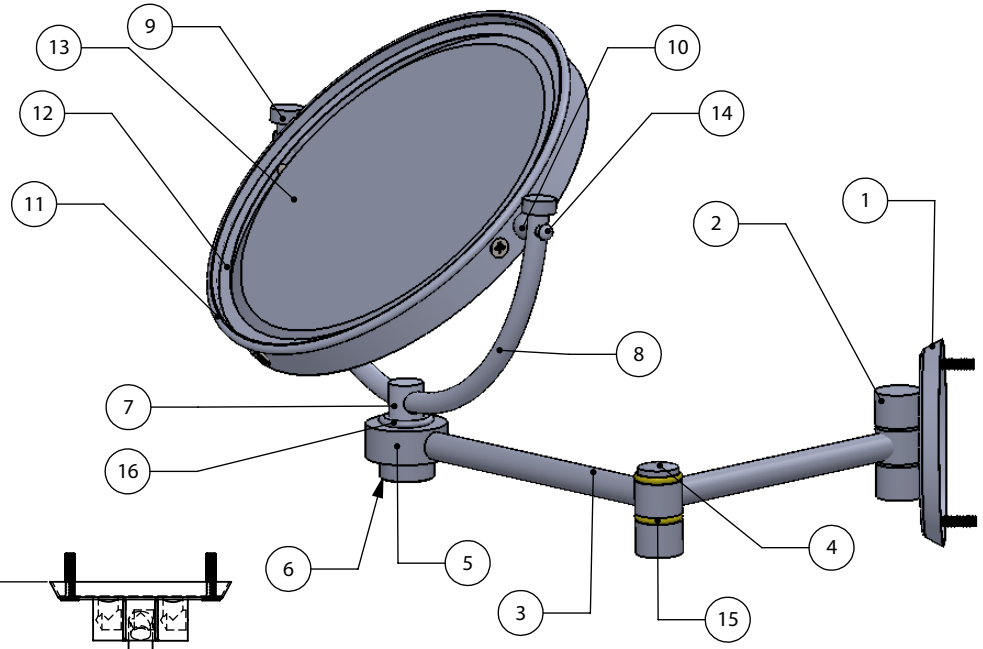

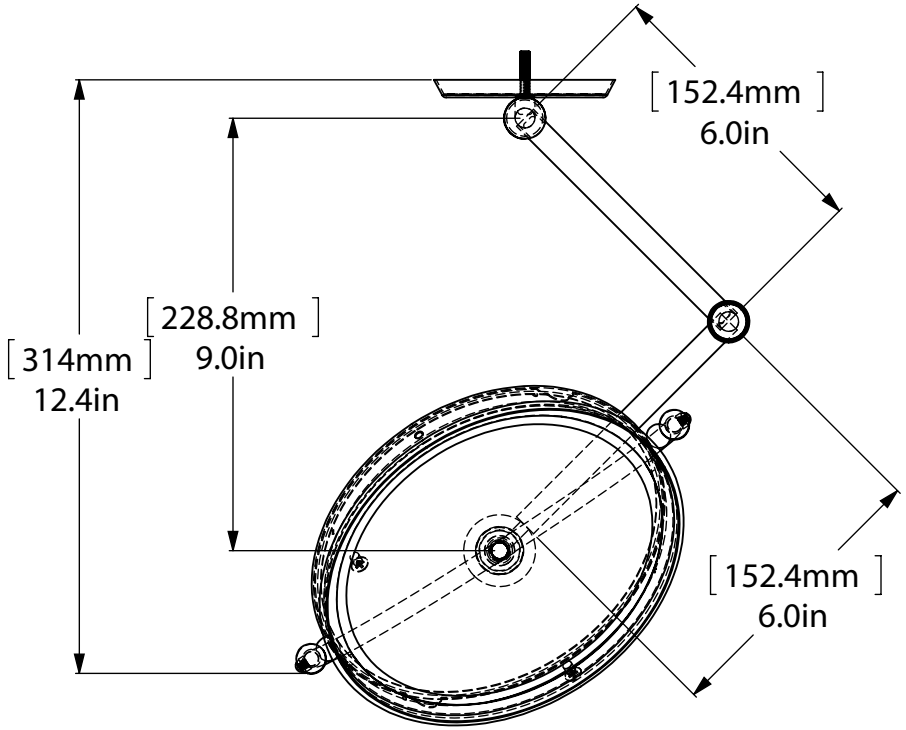

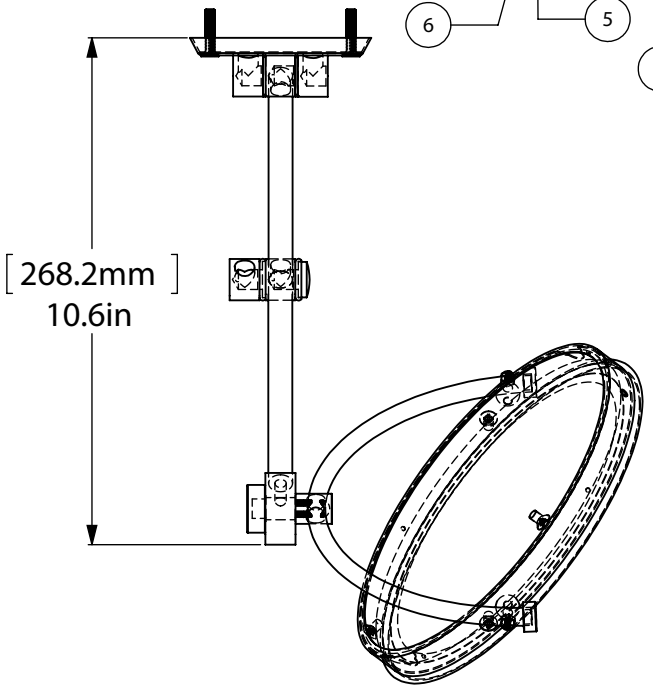

UNLESS OTHERWISE STATED

DO NOT SCALE DRAWING

CHAMFER ALL EDGES 0.5X45°

DRAWING ISO

FIRST ANGLE PROJECTION

X.XXX	+/-0.025
X.XX	+/-0.1
X.X	+/-0.25
X	+/-0.75

ANGLES

X.XX	+/-0.05°
X.X	+/-0.1°
X	+/-0.5°

MACHINED FINISH 3.2

	INITIALS	DATE	ITEM	QTY	DRG/PART NO	CLIENT:		
DESIGNED		IJM	MATERIAL	BRASS	WEIGHT		FINISH	TBD
DRAWN		IJM	HEAT TREAT	NA			QUANTITY	
CHECKED		R. ANDRIS	CUSTOMER		CUSTOMER No		---	
PROJ.ENG			DESCRIPTION:					REV
SAFETY								0
APPROVED		R. ANDRIS						
							SCALE 1:4	SHEET: 01 A4