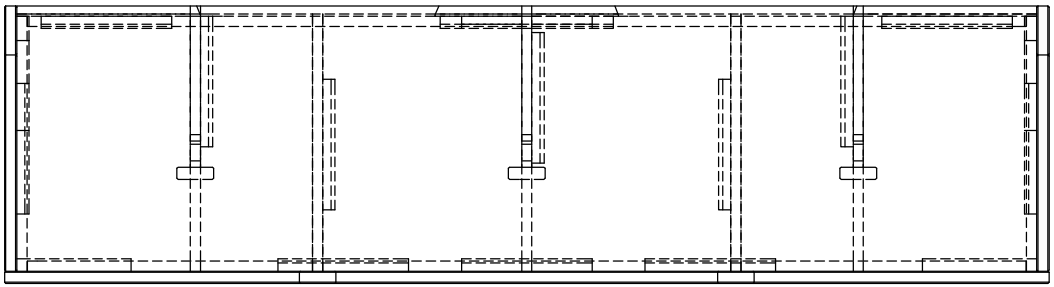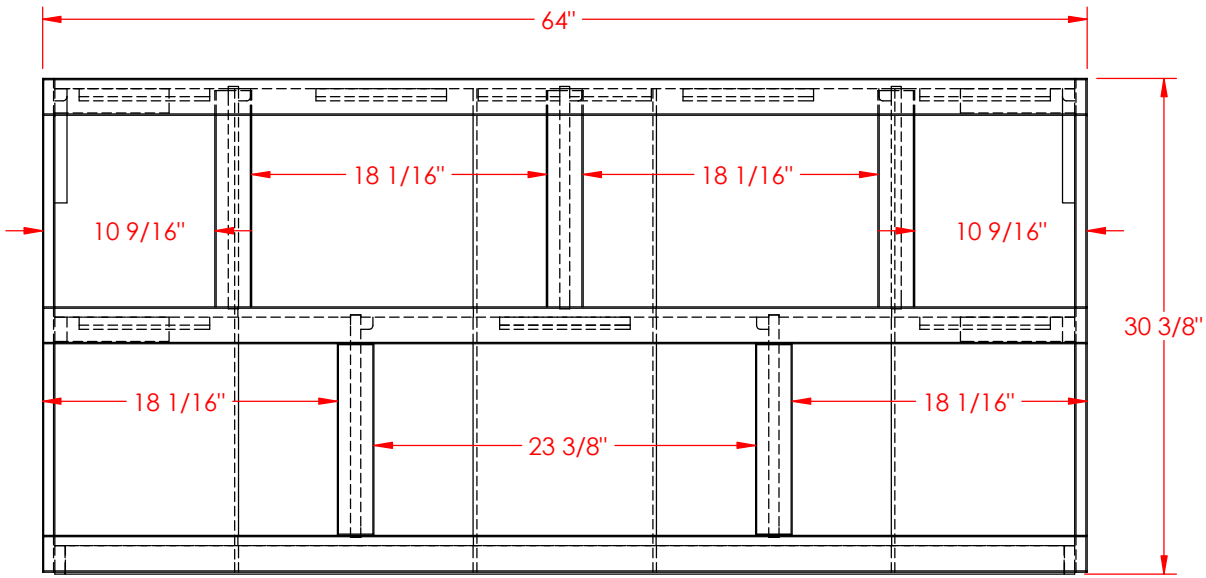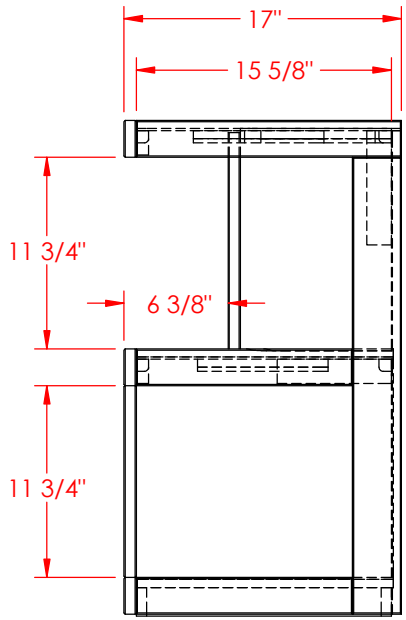Material: Assembly	Width: 64"	Height: 30 3/8"	Depth: 17"