KVPB36MSQ0,1,6,7

36" x 22" Carrara Marble Vanity Top With Stainless Steel Leg

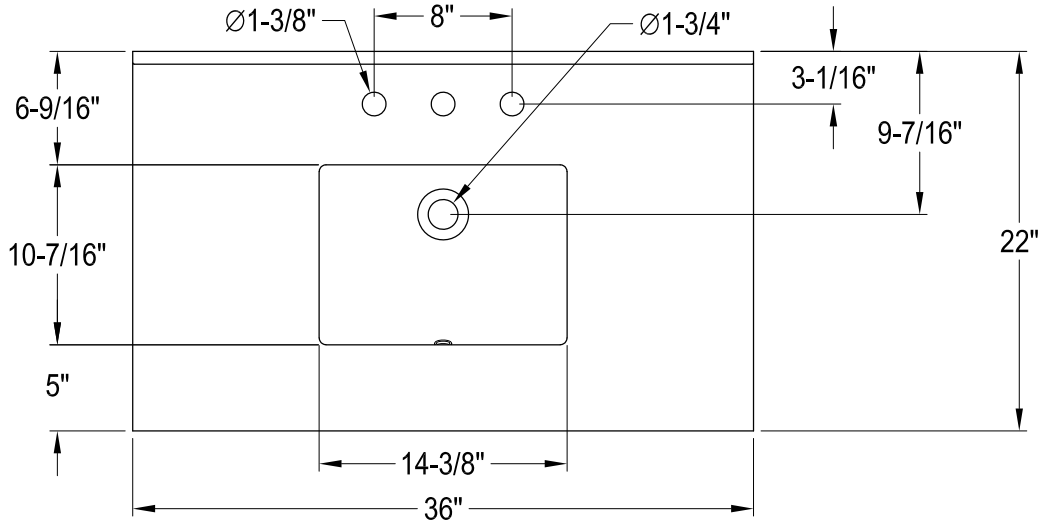

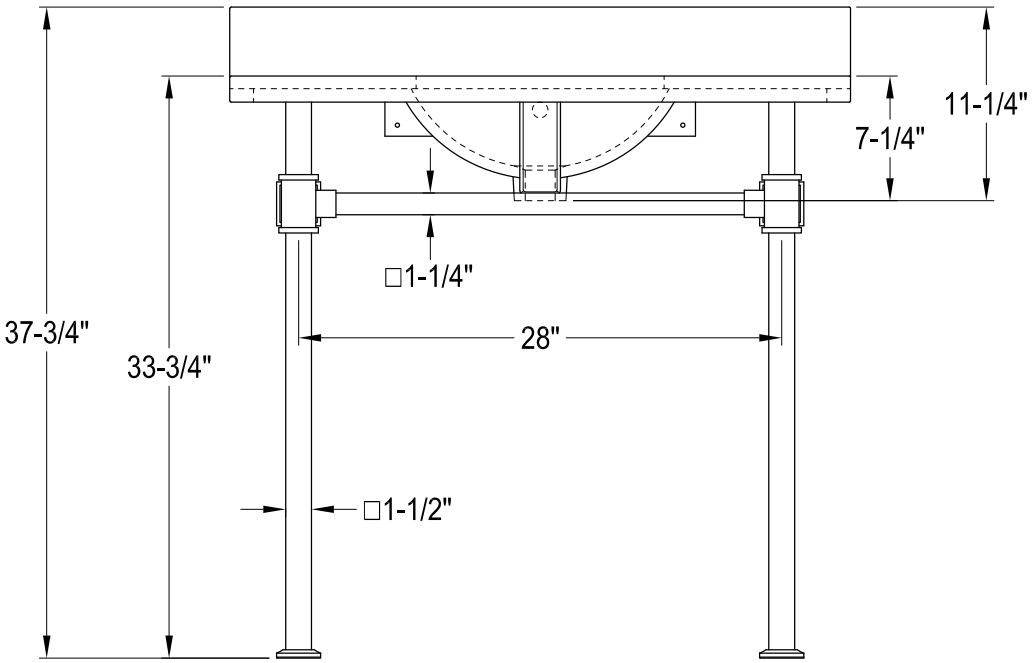

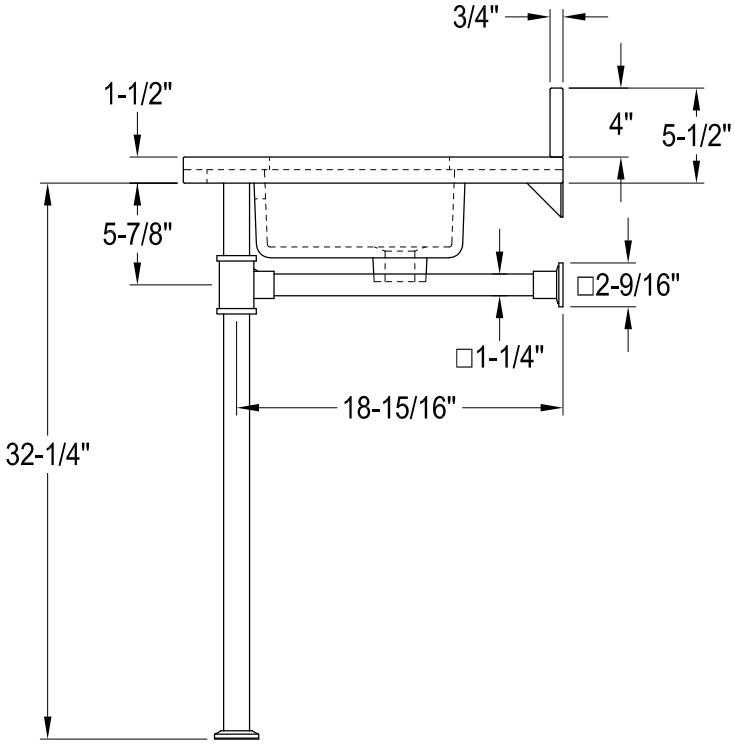

Ref# KVPB36MSQ0,1,6,7 | 2020-06-A