GKB2631,2,5,8KL

Single Handle Pressure Balanced Tub & Shower Faucet

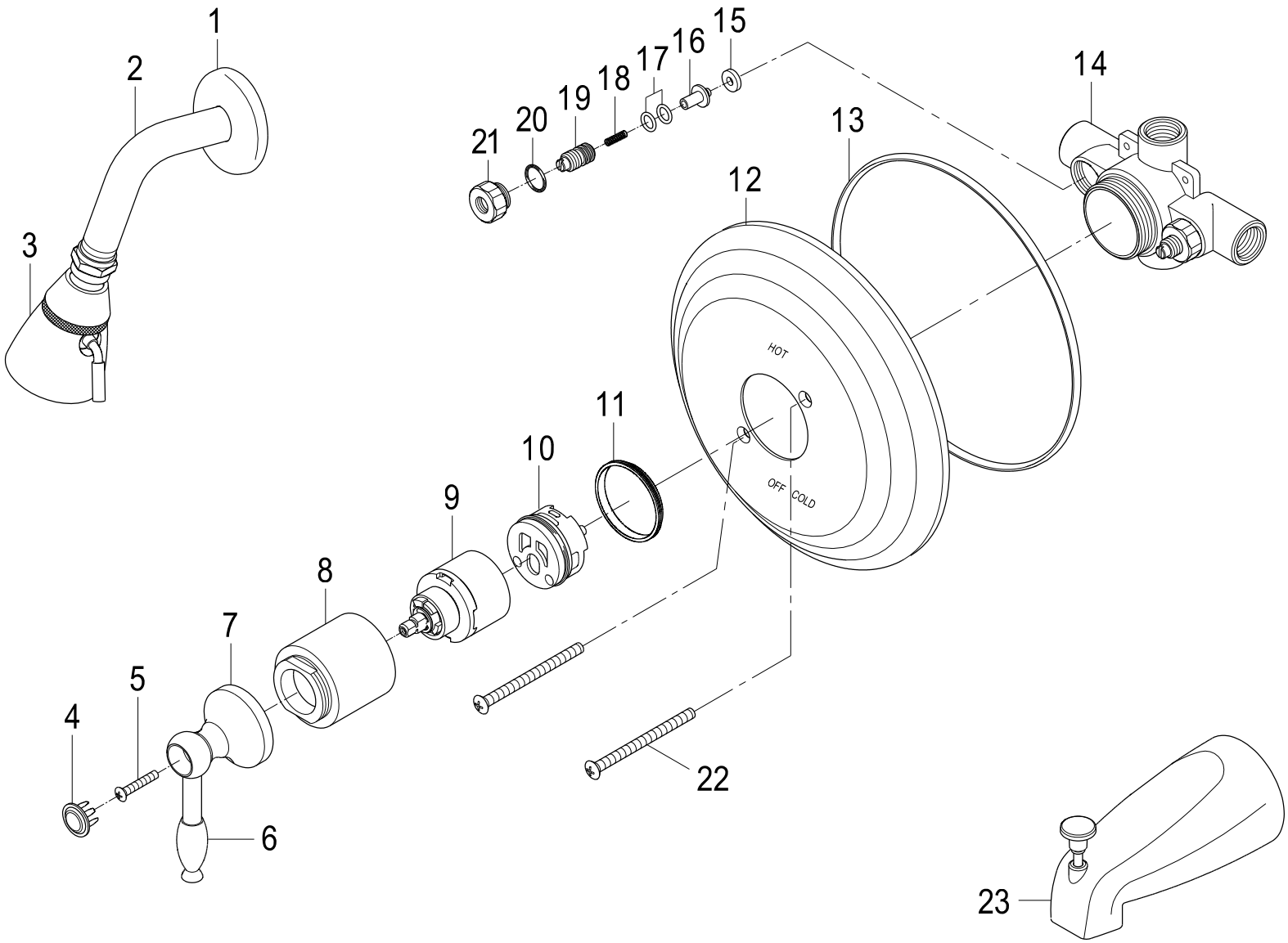

Ref# GKB2631,2,5,8KL | 2012-03-A