Model:
**CC1830F**

# 30 In Charcoal Grill with Offset Smoker

# OWNER'S MANUAL

## FOR YOUR SAFETY!

Use outdoors only! Do not use it in a building, garageor any other enclosed areas.
Read the instructions before assembling and using the appliance.
DO NOT use the grill unless it is completely assembled and all the parts are securely fastened. This grill will become very hot, do not move it during operation.
Keep children and pets away.

## CONTACT US FIRST!

This grill has been made to high quality standards.
If you have any questions that are not addressed in this manual, or you need parts, please call our customer service hotline or send an email to service@royalgourmetusa.com

## Customer Service

1-800-618-6798

Learn more at:

www.royalgourmetcorp.com

# Contents


**Before Using the Device** ..... 2

**For Your Safety** ..... 2-3

- Signal Symbols ..... 2
- General Safety Instructions ..... 2
- Safety Instructions ..... 2-3
- Proposition 65 warning ..... 3

**Intended Use** ..... 3

**Assembly** ..... 3-9

- Preparation ..... 3
- Required Tools ..... 3
- Unpack Grill ..... 3
- Explosion View ..... 4
- Parts and Hardwares ..... 5
- Assembly Instructions ..... 6-9

**Attention** ..... 10

**Before Grilling** ..... 10

**Types of charcoal** ..... 10

**Smoking Woods** ..... 10

**Operation** ..... 11

**Smoke by cooking Operation** ..... 12

**Maintenance and Cleaning** ..... 12

**Grilling Recipes** ..... 13-14

**Smoking Recipes** ..... 15-16

**Disposal** ..... 17

**Declaration of Conformity** ..... 17

**Technical Details** ..... 17

**Warranty and Customer Service** ..... 17

**Spanish** ..... 18-35

**French** ..... 36-53

## Before Using the Device

After unpacking and before every use, check whether the item shows any signs of damage.
If there is any damage, please do not use the grill and call customer service at 1-800-618-6798.
The operating manual is based on the norms and regulations that are applicable in USA. In all other country-specific directives and laws!

Before start-up, first read through the safety information and the operating manual carefully.
Only then can you use all functions safely and reliably.
Keep the operating instructions and give them to any third party who might own the grill after you.

## For Your Safety

**Signal symbols**

### *Danger High risk!*

Failure to heed the warning can lead to injuries, with potentially fatal consequences.

### *Caution Low risk!*

Facts that should be respected when handling the device.

## GENERAL SAFETY INSTRUCTIONS to be observed in each use

- Do not use indoors!
- WARNING! Do not use spirit or petrol for lighting or relighting!
- WARNING! This appliance will become very hot, do not move it during operation!
- WARNING! Keep children and pets away!

## Safety Instructions

### *Danger Fire hazard!*

Live coals and grill components get very hot during operation and can start fires.

- It is essential that you have a fire extinguisher and first-aid kit ready and prepared for an accident or fire.
- Place the grill on an even, horizontal, secure, heat-resistant, and clean surface.
- Set up the grill at least 3 ft. (1m)away from highly flammable materials such as awnings, wooden patios, or furniture.
- Do not move the grill during use.
- Ignite the charcoal only at a sheltered location.
- Fill the grill with a max. 6 lbs of charcoal for the main chamber, and 4 lbs of the smoker.
- Some foods produce flammable fats and juices. Clean the grill regularly preferably after each use.
- Only tip out the ash once the charcoal has completely burned out and cooled down.

### *Danger Risk of burning and accidents!*

This device is not intended for use by persons (inclu - ding children) with limited physical, sensory, or mental capacities or lacking experience, or lacking knowledge.

- Such persons must be informed about the dangers of the device and supervised by a person responsible for their safety.
- Any modifications to the product represent a large safety risk and are forbidden. Do not undertake any unauthorised conversions yourself. In case of damages, repairs or other problems with the grill, contact our customer service at 1- 800- 618 - 6798. or send an email to ***service@royalgourmetuse.com.***
- Keep children and pets away from the device. The grill, the charcoal, and the grilling food becomes very hot during use. Any contact can result in serious bums.
- Keep sufficient distance from the hot parts, since any contact can lead to severe burns.
- Always wear oven mitts or BBQ gloves when grilling.
- Use only long-handled utensils with heat-resistant grips.
- Do not wear any clothing with wide sleeves.
- Use only dry lighters or special fluid lighters.
- Let the grill cool down completely before cleaning and / or placing in storage.

### *Danger Risk of deflagration!*

Flammable liquids that are poured on the embers cause flash flames or deflagrations.

- Never use flammable liquids such as petrol or sprits.
- Nor put pieces of charcoal soaked in flammable liquid onto the embers.

### *Danger Risk of poisoning!*

When burning charcoal, barbecue briquettes, etc., carbon monoxide is formed. This gas is odorless and can be fatal in closed spaces!

- Use the grill outdoors only!

### *Danger Health risk!*

Do not use any decolorants or thinners to remove stains. These are harmful to health and must not come into contact with food.

### *Danger Risks to children!*

While playing, children can become caught in the packaging film and choke.

- Do not let children play with the packaging films.
- Make sure that children do not put any small assembly parts into their mouths. They could swallow the parts and choke on them.

### *Danger  Risk of injury!*

Both the grill and individual parts have some sharp edges.

- Be careful with individual parts to prevent accidents and / or injury during assembly and use. Wear protective gloves if necessary.
- Do not set up the grill near entryways or heavily trafficked zones.
- Always exercise extreme caution while grilling. If distracted, you can lose control of the device.
- Always be attentive and aware of what you are doing. Do not use the grill if you are not focused, tired, or under the influ-ence of drugs, alcohol, or medication. Just one moment of carelessness during use of the product can lead to serious injuries.

### *Attention Risk of damage!*

During use, the screws may loosen slowly and impair the grill's stability.

- Check the stability of the screws prior to each use. If necessary, tighten all of the screws again to ensure the grill is standing securely.

### *Attention Risk of damage!*

Do not use any strong or grinding solvents or abrasive pads, since these can attack the surfaces and leave behind scrape marks.

### CALIFORNIA PROPOSIYION 65 WARNING

1. Fuels used in wood and charcoal burning appliances and the products of combustion of such fuels, can expose you to chemicals including carbon black and wood dust, which are known to the State of California to cause cancer, and carbon monoxide, which is known to the State of California to cause birth defects or other reproductive harm.

2. This product can expose you to chemicals including nickel, which is known to the State of California to cause cance cncer. Handling the brass material on this product can expose you to lead, a chemical known to the State of California to cause cancer, birth defects or other reproductive harm.

*For more information go to:* ***WWW.P65Warnings.ca.gov***

**THESE WARNINGS ALSO APPLY TO THE SIDE FIRE BOX.**

## Intended Use

Use this grill to heat, cook and grill food.
This grill is intended exclusively for outdoor use and not for use indoors.Only use the item as described in this operating manual.
All other uses are considered improper and can lead to material damage or even to personal injuries.
The manufacturer accepts no liability for damages caused by improper use.

## Assembly



### *Danger  Risk of deflagration!*

Failure to follow these instructions can lead to problems and risks while using the grill.

- Follow all of the assembly instructions listed here.

1. First read through the assembly instructions completely.
2. Allow yourself enough time for assembly and find an even working space of two to three square meters.
3. Small parts such as handles will probably be preassembled.

## REQUIRED TOOLS(Not included)

1 X Philips screwdriver

1 X Wrench

## Unpack Grill

Unpack the grill and dispose of all packaging materials. Keep the packaging materials out of the reach of children and dispose of them according to regulations after grill assembly. Take the following steps to assemble the grill.

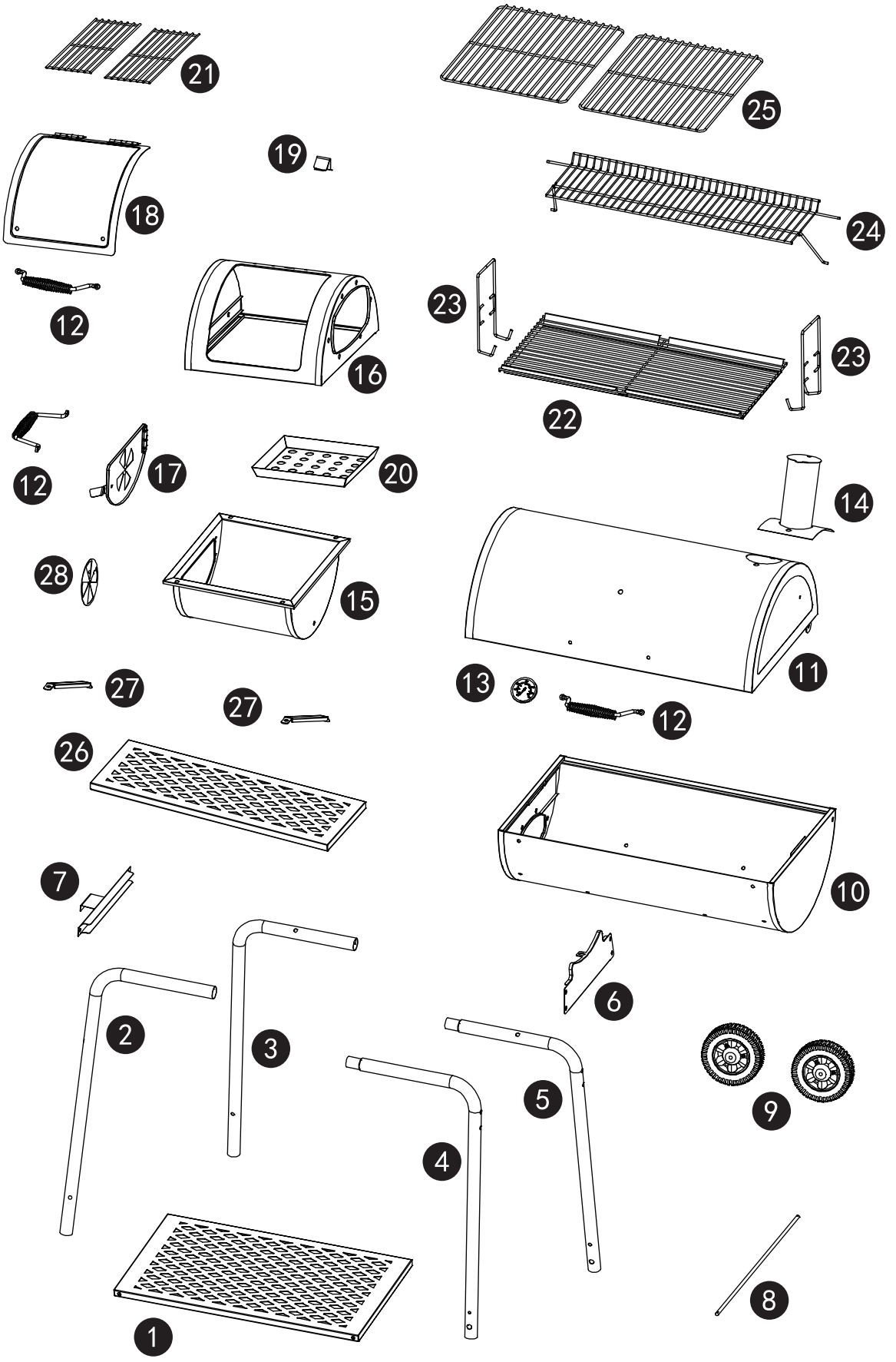
21
25
19
18
24
12
23
16
23
22
12
17
20
14
28
15
11
13
27
27
12
26
10
7
6
2
3
5
9
4
8
1

## Parts and Hardwares

| Ref | Description | Illustration | QTY |
|---|---|---|---|
| 1. | Bottom shelf<br>Z-CC1830056 | | 1 |
| 2. | Left front leg<br>Z-CC1830F014 | | 1 |
| 3. | Left back leg<br>Z-CC1830F015 | | 1 |
| 4. | Right front leg<br>Z-CC1830F016 | | 1 |
| 5. | Right back leg<br>Z-CC1830F017 | | 1 |
| 6. | Leg connector<br>Z-CC1830010 | | 1 |
| 7. | Smoker brace<br>H-CC1830003 | | 1 |
| 8. | Axle<br>W-20130023 | | 1 |
| 9. | Wheel<br>W-20130010 | | 2 |
| 10. | Main body<br>H-CC1830013 | | 1 |
| 11. | Main body lid<br>H-CC1830001 | | 1 |
| 12. | Handle<br>W-CC1830S001<br>W-CC1830002 | | 3 |
| 13. | Thermometer<br>W-11920008 | | 1 |
| 14. | Stack<br>H-CC115WT003<br>+ Z-GC33A009 | | 1 |

| Ref | Description | Illustration | QTY |
|---|---|---|---|
| 15. | Smoker lower<br>H-CC1830012 | | 1 |
| 16. | Smoker upper<br>H-CC1830011 | | 1 |
| 17. | Smoker side door<br>H-CC1830007 | | 1 |
| 18. | Smoker lid<br>H-CC1830010 | | 1 |
| 19. | Smoker lid brace<br>Z-CC1830029 | | 1 |
| 20. | Smoker charcoal pan<br>Z-CC1830054 | | 1 |
| 21. | Smoker cooking grate<br>W-CC1830010 | | 2 |
| 22. | Charcoal pan<br>Z-CC1830008<br>W-CC1830007 | | 1 |
| 23. | Lifting handle<br>W-CC1826A004 | | 2 |
| 24. | Warming rack<br>W-CC1830003<br>W-CC1830006 | | 1 |
| 25. | Cooking grate<br>W-CC1830005 | | 2 |
| 26. | Front shelf<br>Z-CC1830057 | | 1 |
| 27. | Front shelf brace<br>Z-CC1830031 | | 2 |
| 28. | Air vent<br>Z-GC33E028 | | 1 |

| A | M6x15 | 34pcs | B | M4x8 | 6pcs | C | M6 | 11pcs | D | M6 | 3pcs | E | M6x50 | 4pcs |
|---|---|---|---|---|---|---|---|---|---|---|---|---|---|---|
| | | | | | | | | | | | | | | |
| F | Split pin | 4pcs | G | Pad | 2pcs | H | M5x10 | 4pcs | | | | | | |
| | | | | | | | | | | | | | | |

## Step 1

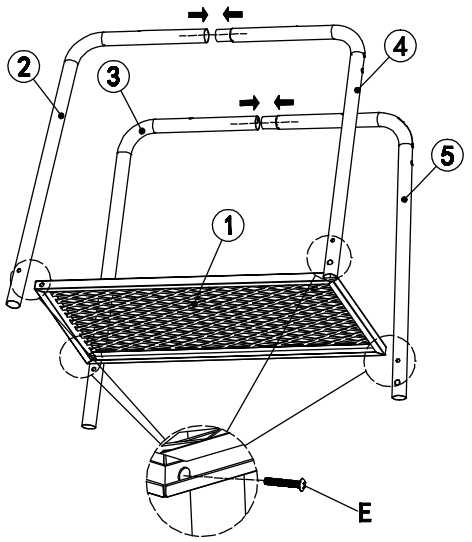


IMAGE 1

Connect the left front leg (2) and right front leg (4), left back leg (3) and right back leg (5).
Assemble the bottom shelf (1) to the legs with 4 bolts (E) .
Please note: At this point, the left side bolts only need hand tightened.

## Step 2

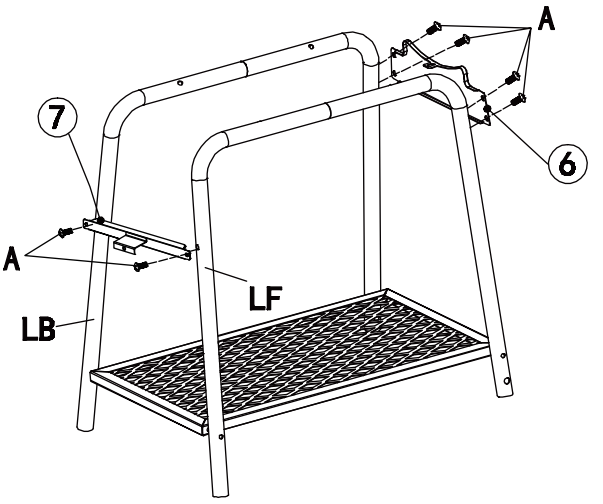


Assemble the smoker brace (7) to the left legs with 2 bolts (A), leg connector (6) to right legs with 4 bolts (A).
Please note: Do not secure the bolts until step 4.

## Step 3

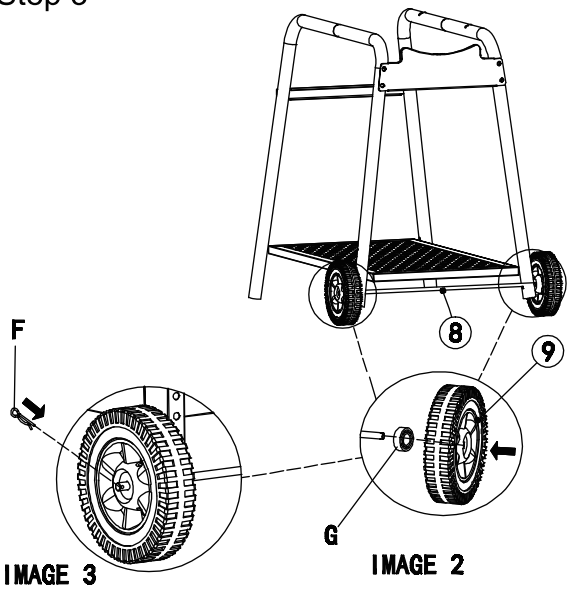


IMAGE 3 IMAGE 2

Slide axle (8) through the right legs.
Attach the washer (G) and wheel (9) on the axle from both sides as IMAGE 2.
Secure each wheel with a split pin (F) as IMAGE 3.

## Step 4

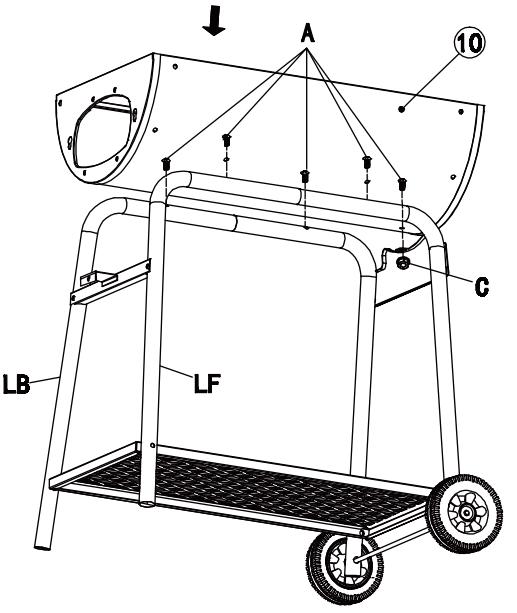


Assemble the main body (10) to the legs with 4 bolts (A).
At this point, the bolts only need hand tightened.
Fasten the main body to the leg connector with 1 bolt (A) and 1 nut (C) as shown.
Now, secure all the bolts.

## Step 5

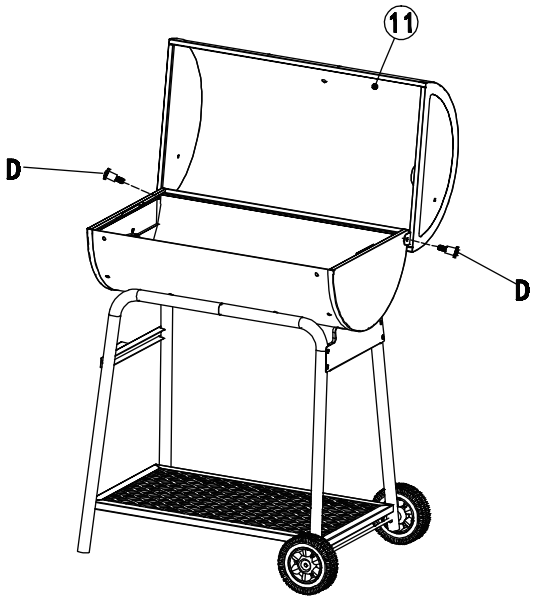


Assemble the main body lid (11) to the main body with 2 bolts (D).

## Step 6

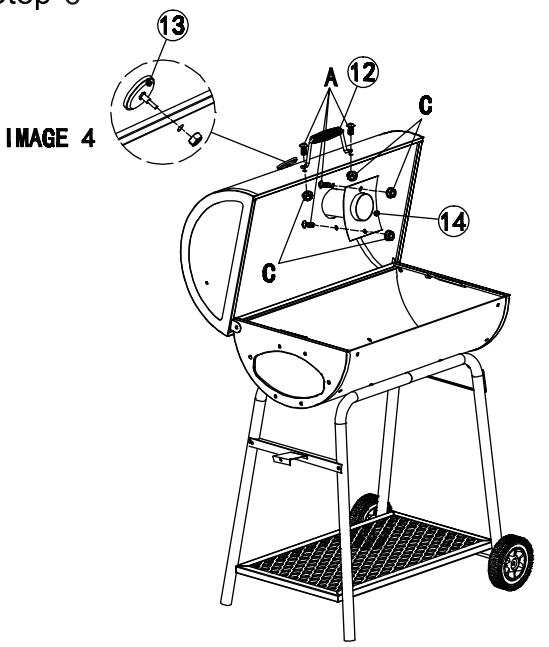


Fasten the handle (12) to the lid with 2 bolts (A) and 2 nuts (C).
Fasten the stack (14) onto the lid with 2 bolts (A) and 2 nuts (C).
Insert the thermometer (13) into the lid and secure it in place with a nut.

## Step 7

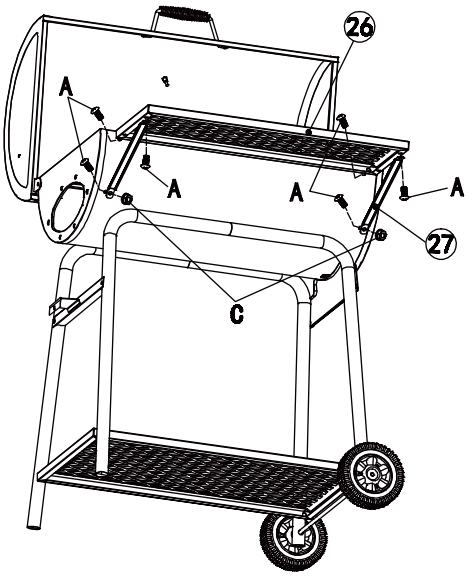


Assemble the front shelf braces (27) to the main body with 2 bolts ( A) and 2 nuts (C).
Assemble the front shelf (26) to the main body with 2 bolts (A).
Fasten the braces to the front shelf with 2 bolts (A).

## Step 8

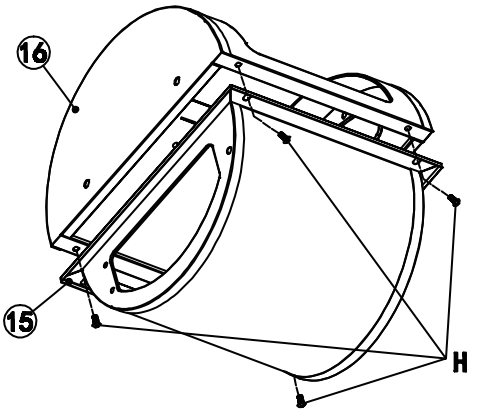


Assemble the smoker lower part (15) and upper part (16) together with 4 bolts (H).

## Step 9

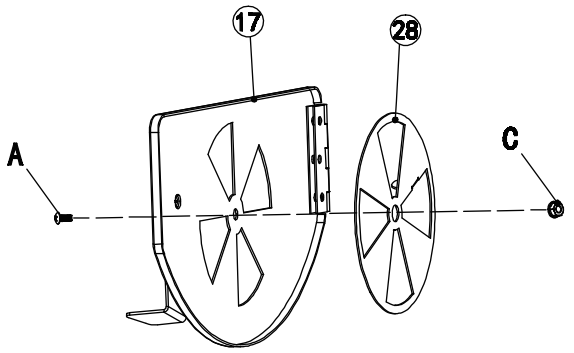


Fasten the air vent (28) to the smoker side door (17) with a bolt (A) and a nut (C).

## Step 10

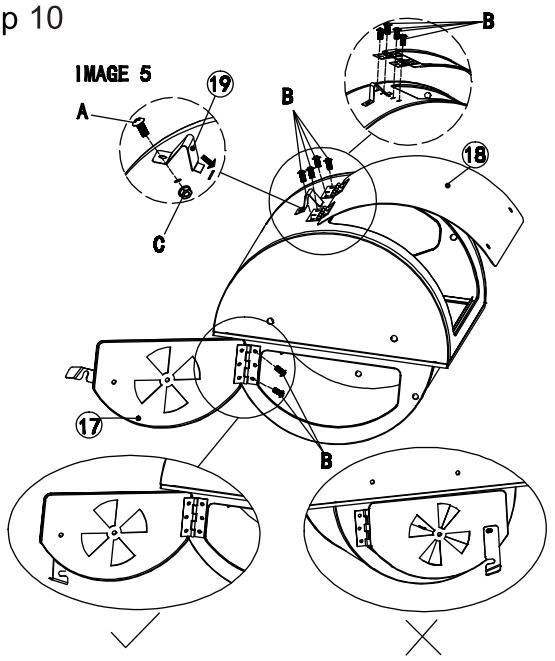


Assemble the smoker side door (17) to the lower part with 2 bolts (B).
Insert the smoker lid brace (19) to the upper part, and fasten it with 1 bolt (A) and 1 nut (C) as IMAGE 5.
Assemble the smoker lid (18) to the upper part with 4 bolts (B).

## Step 11

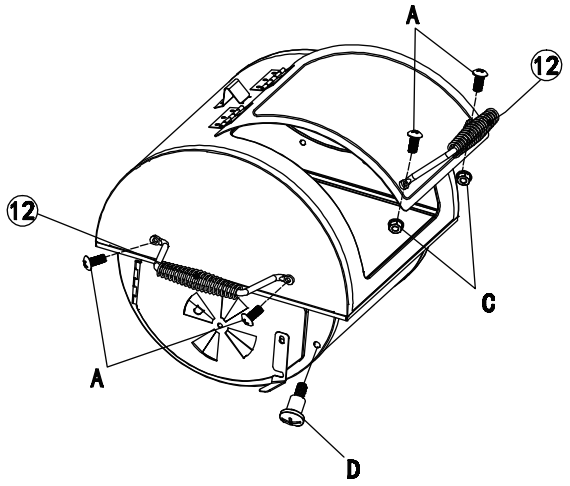


Fasten the handle (12) to the smoker lid with 2 bolts (A) and 2 nuts (C).
Fasten the handle (12) to the smoker upper part with 2 bolts (A).
Screw 1 bolt (D) to the smoker lower part as shown.

## Step 12

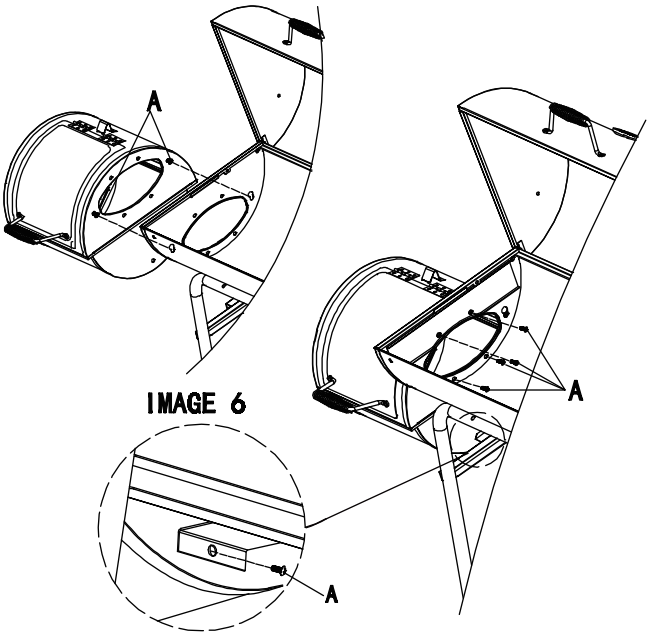


Screw 2 bolts (A) halfway on the smoker, hold it onto the main body as shown.
Fasten the smoker to main body with 4 bolts (A).
Please note: 1 bolt (A) is fastened to the smoker brace as IMAGE 6.

Step 13

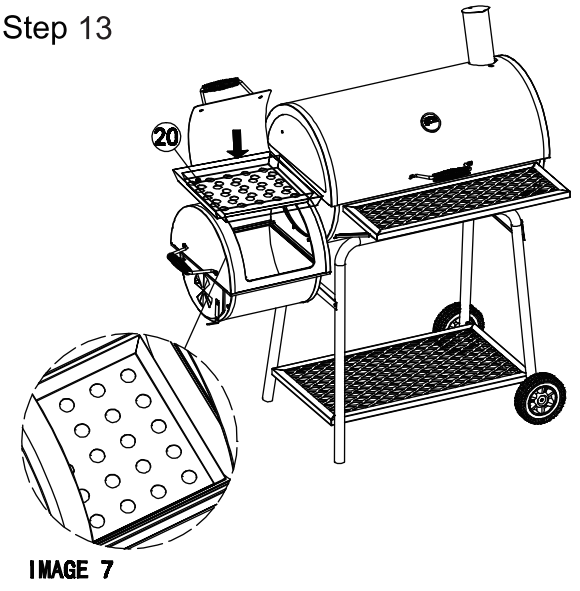


Place the smoker charcoal pan (20) to the right position of the smoker as IMAGE 7.

Step 14

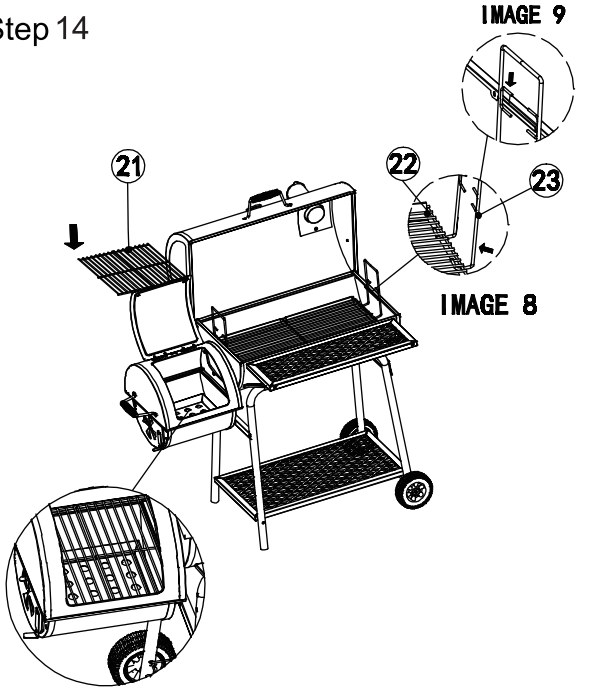


Place the smoker cooking grates (21) into the right position of the smoker.
Connect the lifting handles (23) to the charcoal pan (22) and place them into the main body.

Step 15

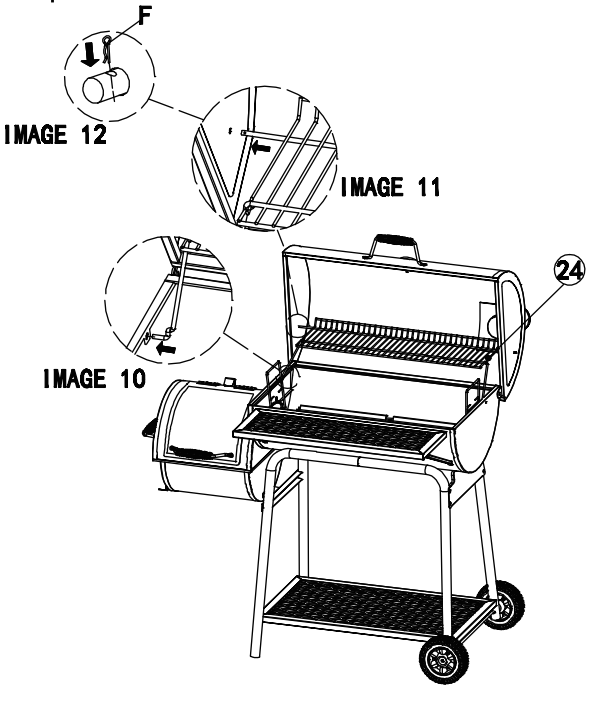


Assemble the warming rack (24) to the main body & lid, secure it with 2 split pins (F) as shown.

Step 16

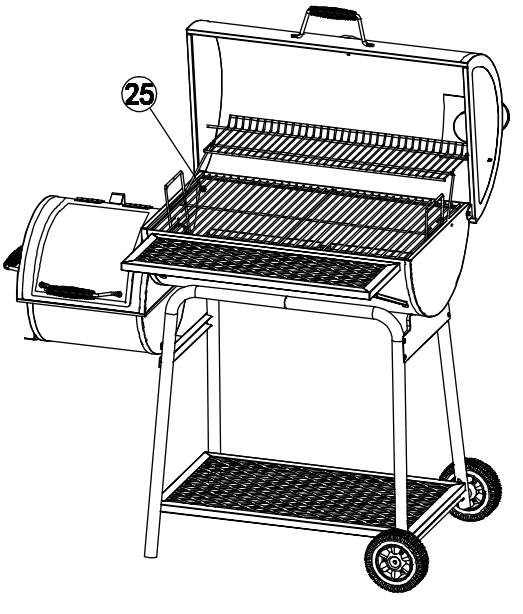


Place the cooking grates (25) onto the main body.

## Attention

***Attention Risk of damage!***

During use, the screws can loosen slowly and impair the grill's stability.

– Check the stability of the screws prior to each use. If necessary, tighten all of the screws again to ensure the grill is standing securely.

- Before using, place the grill on an even, sturdy surface outdoors.

## Before Grilling

- Prior to fist use, wash the cooking grates and the warming rack with warm soapy water.

### Pre-firing

- Before you use the grill for the first time, it needs to be conditioned (pre-fired) for at least 1-2 hours at a temperature of 212°F - 392°F. This is necessary in order to make the inside ready for barbecuing and to burn in the heat-resistant paint on the outside.
  During pre-firing, the cover should not be closed completely.
  Only close the cover completely for a few minutes at the end.
  Attention: The temperature must never exceed 400°F.

**Grill will drip oil during this process and for several uses afterwards. This is normal.**

NEVER EXCEED 400°F BECAUSE. THIS WILL DAMAGE THE FINISH AND CONTRIBUTETO RUST. PAINT IS NOT WARRANTED AND WILL REQUIRE TOUCH-UP. THIS IS NOT WARRANTED AGAINST RUST.

## Types Of Charcoal

**You can burn either charcoal briquets or natural wood lump which have different attributes. Charcoal briquets typically provide longer cooking times and are usually less expensive while lump charcoal burns hotter and produces less ash.**

## Smoking Woods

### TIPS FOR USING WOOD CHIPS

There will be a lot of smoke produced when using wood chips. Smoke will escape through seams and turn the inside of smoker black. This is normal.
Wood chips must be used in order to produce smoke and create the smoke flavor. Never use more than 1 box of wood chips at a time. Never use wood chunks.
You may use dry or pre-soaked wood chips in your smoker.Dry chips will burn faster and produce more intense smoke. Chips pre-soaked in water (for approximately 30 minutes)will burn slower and produce a less intense smoke.
Check wood chip box periodically to see if wood has burned down. Add more chips as needed.

### SMOKING WITH WOOD CHIPS/ WOOD CHUNKS

For a more robust smoke flavor while using charcoal briquettes or lump charcoal, try adding wood chips or several wood chunks to fire. Wood chunks are avaiable in a variety of natural flavors, and can be used alone or in addition to charcoal. As a general rule, any hardwood that bears a fruit or nut is suitable for cooking. However,different woods have very different tastes. Experiment with different woods to determine your personal favorite,and always use well-seasoned wood. Green or fresh-cut wood can turn food black, and tastes bitter.

Our Recommendations:

**Chicken** - Alder, Apple, Hickory, Mesquite, Sassafras,Grapevines
**Beef** - Hickory, Mesquite, Oak, Grapevines
**Pork** - Fruitwoods, Hickory, Oak, Sassafras
**Lamb** - Fruitwoods, Mesquite
**Veal** - Fruitwoods, Grapevines
**Seafood** - Alder, Mesquite, Sassafras, Grapevines
**Vegetables** - Mesquite

## Operation

### *Danger  Risk of burning!*

The grill, the charcoal and BBQ meat will become very hot during use. Any contact can result in serious burns.

- Keep suffcient distance from the hot parts, since any contact can lead to severe burns.
- Always wear oven or BBQ gloves when grilling.
- Use only long-handled utensils with heat-resistant grips.
- Do not wear any clothing with wide sleeves.
- Use only dry lighters or special fluid lighters.

### *To Lighting Your Grill:*

1. Open the lid and remove the cooking grates.
2. To start a charcoal fire, stack 4.5 lb in a pyramid and saturate with lighter fluid.

Do not use gasoline, kerosene or alcohol for lighting charcoal. Use any of these or similar products can cause an explosion possibly leading to severe bodily injury.

3. Light coals in several places
4. After briquettes ash over or turn gray, spread them out. Please use a suitable fireproof tool with a long, fireproof handle when you do this.
5. Put the cooking grates in place and adjust the charcoal pan to the desired height using the lifting handle/lever and start cooking.
6. If it not burns evenly, please use long-handled tongs to move coals for even heat.
7. Leave the lid open or closed considering the type of BBQ meat. Please close the lid when longer cooking time is needed.The thermometer located on the lid shows the temperature to ensure it woudn't be too high for a particular BBQ meat.

Chimney starters, electric starters, or other types of fire starters may be used instead of lighter fluid to light fire, but use only according to manufacturer's instructions. Never use instant light charcoal or charcoal lighter fluid with any other starting methods.

Allow enough time for grill to heat up before cooking. You can neither cook properly when the grill is cold nor can you nurse a fire while being busy with food. Once the fire is burning well, it is easy to keep it going with a little attention.

Rising heat will move up and out of the grill, pulling in cooler air behind it, which provides oxygen for the fire. Use the air vent and stack dampers to control the airflow and the cooking temperature, After the fire is established and the grill reaches the desired cooking temperature, the dampers can be left completely open for maximum airflow and a higher cooking temperature-or closed as needed to decrease airflow for a lower cooking temperature. Use the heat indicator to monitor grill temperature.

The adjustable charcoal pan can also be used to control the temperature.
Use lifting handles to raise it for quick searing and lower it for slow cooking.

**Always use a flame-retardant insulated grill mitt when adjusting air vent or adjusting the charcoal pan.**

**Open charcoal access door or add charcoal with extreme caution to avoid injury.**

1. Using lifting handles, lower charcoal pan to its lowest setting.
2. Open charcoal pan access door using a flame-retardant insulated grill mitt. (Handle will be very hot.) Please take out all the food and put on BBQ gloves, move the cooking grate to add charcoal if the grill don't have a device for adding charcoal. Make sure to move the cooking grate back into position after the whole procedures.
3. Using flame-retardant insulated grill mitts and long-handled tongs, stoke coals with flame-retardant insulated grill mitts and long-handled tongs to make ash fall through the slots in the charcoal pan or the slide below.
4. Using flame-retardant insulated grill mitts and long-handled tongs, Add charcoal to the pan as needed with flame-retardant insulated grill mitts and long-handled tongs.
5. Raise charcoal pan to the desired level.

**Do not use lighter fluid or instant light charcoal when adding additional charcoal to an existing fire.**

**This is dangerous and can cause injury. It will also leave a lighter fluid aftertaste on your food. Only add regular charcoal or wood chunks to an existing fire.**

## Smoke by Cooking OperationTT

Smoke by cooking uses indirect heat and smoke. SMOKE BY COOKING SLOWLY. To light the barbecue.

1. Open the lid and remove cooking grates.
2. To start a charcoal fire, stack 4 lb in a pyramid and saturate with lighter fluid.

Do not use gasoline, kerosene or alcohol for lighting charcoal. Use any of these or similar products could cause an explosion possibly leading to severe bodily injury.

3. Light coals in several places.
4. After briquettes ash over or turn gray, place hot charcoals on cooking grates in offside smoker if have one. Place hot charcoals on the middle of cooking grates. To do this, use a suitable fireproof tool with a long, fireproof handle.
5. Place water/drip pan on right side of cooking grates in offside smoker if have one.
6. Place cooking grates in low position.
7. Add water soaked hardwood chips for a smoked flavor.
8. Put the cooking grates in place.
9. Close lid & control heat with dampers & adjustable grate.

### *Tips for Smoke BBQ*

**Pans are not included and a disposable bread pan is recommended. Please purchase it separately.**

- If you want to sear certain foods before smoking, please place meat directly above charcoals with lid open and cooking grates in high(hot) position for several minutes.
- Add flavor soaked wood chips to the fire and add 1 part marinade, beer, or wine to 3 parts water to the drip pan.
- Opening the smoking chamber will extend cooking time.
- Insert thermometer into thickest part not touching bone, and allow five minutes to register.
- Internal temperature for birds should be 170°F to 180°F or when leg moves easily in joint.
- Meat should be cooked to internal temperature of 140°F for rate, 160°F for medium and 170°F for well done.
- Check the water level when cooking more than 4 hours or when you can't hear the water simmering.
- Add water by moving meat over and pouring water through grill into water pan.

IF THE SMOKE IS WHITE, THE FIRE'S RIGHT.
IF THE SMOKE IS BLACK, ADD SOME DRAFT.

## Maintenance and Cleaning

Your grill is made of high-quality materials. To clean and maintain the surfaces, please heed the following instructions:

### *Danger Risk of burning!*

Let the grill cool down completely before cleaning it.

- Only tip out the ash when the fuel has completely burned out.

### *Danger Health risk!*

Do not use any decolorants or thinners to remove stains. These are harmful to health and must not come into contact with food.

### *Attention Risk of damage!*

Do not use any strong or grinding solvents or abrasive pads, since these can attack the surfaces and leave behind scratch marks.

When your are finished grilling you can shut down your grill by closing both dampers and allowing the fire to suffocate. Be patient. This may take an hour or more.

### *Empty the Ashes & Ash pan:*

After the fire is completely extinguished you should wait several hours before emptying the ashes to ensure that are not hot, or it will lead to a burn hazard.

- Knock any ashes that did not fall into the ash pan from the fire grate. (If there are pieces of partially burned charcoal on the cooking grate you can save them for the next time. They are still good).
- Tap the sides of the fire bowl to knock loose any ash that is on the sides.
- Unclip the ash pan from the bottom of the grill and slide out towards the front.
- Give the ash pan a few firm taps to loosen any ash that may be stuck.
- Place the ashes in a metal container and cover with water to ensure there are no lit coals then you can dispose of the ashes.
- Let the fuel burn out completely after grilling. This eases the cleaning effort by burning away excess fat and BBQ residues.
- Lift out the charcoal pan and empty out the cold ash. It is very important that you remove the ash before moisture combines with the cold ash.Ash is saline and, in a moist condition, will attack the inside of the ash collecting tray. Thus, over years the ash collecting tray can sustain damage through rust.
- Clean the grill regularly, at best after every use.
- Remove the cooking grates and clean them thoroughly with soapy water, Then dry them off thoroughly.
- Use a wet sponge to remove loose residue from the grill.
- Use a soft, clean cloth for drying. Do not scratch the surfaces when wiping them dry.
- Clean the internal and external surfaces generally with warm soapy water.
- Tighten all screws before every use to guarantee stability for your grill at all times.
- Protect your grill against continuous weather influences. Since it is manufactured from steel it will eventually rust. Clean possible rust spots and repair them with fireproof paint. It is important that you remove the ash from the firebox before moisture combines with the cold ash, since this leads to rust damage.

The grill should always be stored where it is protected from moisture.

Charcoal is porous and holds moisture. DO NOT leave charcoal in your grill while you are not using it. Charcoal and ashes left inside the ash pan may reduce the life of your grill.

## Direct Heat

| BEEF INTERNAL TEMPERATURE CHART | | | |
|---|---|---|---|
| **Degree of Doneness** | **Internal Core Temperature** | **Internal Description** | **Firmness** |
| Rare | 125°F | Center is bright red, pinkish toward the exterior portion, and warm throughout | Soft to the touch |
| Medium Rare | 130-135°F | Center is very pink, slightly brown toward the exterior portion, and slightly hot | Yields only slightly to the touch |
| Medium | 140-145°F | Center is light pink, outer portion is brown and hot throughout | Beginning to firm to the touch |
| Medium Well | 150-155°F | Mostly gray-brown throughout with a hint of pink in the center | Firm to the touch |
| Well Done | 155°F and above | Steak is brown-gray throughout | Firm or hard to the touch |
| **POULTRY INTERNAL TEMPERATURE CHART** | | | |
| Whole Chicken | 165°F | Cook until the juices run clear | Firm to the touch |
| Dark Meat | 165°F | Cook until white throughout but still moist | Firm to the touch |
| Breast Meat | 165°F | Cook until white throughout but still moist | Firm to the touch |
| Thigh, Wings and Legs | 165°F | Mostly gray-brown throughout with a hint of pink in the center | Firm to the touch |
| **PORK INTERNAL TEMPERATURE CHART** | | | |
| Medium | 150°F | Pink in the center | |
| Well Done | 160°F and above | Pork is uniformly white/brown throughout | |
| Pork Ribs | 180-200°F | Pale white to can. Cook medium to well done | |
| Sausage Raw Sausage | 160°F | No longer pink | |
| Sausage (Pre-cooked) | 140°F | No longer pink | |

## STEAK (& ALL MEATS):

- Cook food on the charcoal side of the unit, directly above coals/ heat.
- To grill meats, raise fire grate to high position (hot) and sear for one minute on each side with the lid open to seal in flavor and juices. Then lower fire grate to medium position with lid closed and cook to desired doneness.
- Control heat with dual dampers and adjustable fire grate.

### Tip:

Place grilled meat back in the marinade for several minutes before serving - it will become tastier and juicier.

### CAUTION:

Boil extra marinade first to kill bacteria remaining from the raw meat.

## MARINATED FLANK STEAK:

- Mix marinade ingredients in nonmetal dish.
- Let steak stand in marinade for no less than 4 hours in refrigerator.
- Brown each side for 5 minutes, but center should remain rare.
- Cut steak diagonally across the grain into thin slices before serving.
- Grill with fire grate in high(hot) position with lid open or closed.

## Meat Marinade

1/2 cup vegetable or olive oil
1/3 cup soy sauce
1/4 cup red wine vinegar
2 tbsp lemon juice
1 tsp dry mustard
1 minced clove garlic
1 small minced onion
1/4 tsp pepper

## QUAIL OR DOVES:

- Cover birds with good seasons and marinate overnight.
- Pour remaining dressing and cover with Texas Pete Hot Sauce for 6 hours.
- Wrap birds in thick bacon secured by a toothpick.
- Place on grill. Keep turning until bacon is black.
- Grill for 20 minutes. Sear with lid open and fire grate in high (hot) position for 1 minute on each side before lowering grate and closing lid.
- To smoke and place brids in center of grates with fire in both ends of fire box.

## HOT DOGS:

- Grill with lid up and cooking grates in high(hot) position for approximately 6 minutes.
- Turn every few minutes.

## SWEET CORN IN HUSKS:

- Trim excess silk from end and soak in cold salted water 1 hour before grilling.
- Grill 25 minutes – turning several times.

## KABOBS:

- Alternating on skewers any combination of meat, onions, tomatoes, green peppers, mushrooms, zucchini, circular slice of corn-on-the-cob, or pineapple. Meat could consist of shrimp, scallops, lobster, chicken, sausage, pork, beef, etc.
- Marinate the meat in refrigerator for several hours.
- Grill each side approximately 7 minutes turning occasionally while basting with marinade.
- Leave a small amount of room between pieces in order to cook faster.
- Grill with lid up and the cooking grates in the lowest position.

## Kabob Marinade:

1 cup soy sauce
½ cup brown sugar
½ cup vinegar
½ cup pineapple juice
2 tsp salt
½ tsp garlic powder
- Mix all ingredients in a saucepan and bring to boil.
- Allow marinade to cool before marinating your meat in it.
- Marinate beef in mixture a minimum of 4 hours.

## HAMBURGERS:

See meat marinade on prior pages.
You may also marinate by allowing to stand in marinade for 1 or 2 hours at room temperture before cooking or let stand in covered dish in refrigerator up to 24 hours.
- Bring to room temperature before cooking.
- Mix in chopped onions, green peppers, salt, sear 3/4 inch patties on each side with cooking grates in high position for a few minutes.
- Lower fi re grate to medium position and grill with lid down to avoid flare-ups.
- Cook each side 3 to 7 minutes according to desired doneness.
- Cook ground meat to 150 internally or until juice runs clear (free of blood) for prevention of E-coli.
- Burgers can be basted with marinade when turning and/or other ingredients can be mixed in with the ground beef such as chili sauce or powder.

## SHRIMP(Peedled) & CRAYFISH:

- Place on skewers.
- Coat with melted butter and garlic salt.
- Grill 4 minutes on each side or until pink. Cocktail sauce optional.

## BAKED POTATOES:

- Rub with butter and wrap in foil and cook on grill with lid down for 50 minutes.
- Turn after 25 minutes (no need to turn if smoked).
- Squeeze to check for doneness.

## Indirect Heat

# SMOKING TIMES

| Food | Weight | | | Temperature on Meat Thermometer |
|---|---|---|---|---|
| Beef Roasts, Beef Brisket | 3 - 4 lbs | 1 - 1½ hours | 4 - 5 hours | 140° rare |
| Lamb Roasts, Venison | 5 - 7 lbs | 1¾ - 1½ hours | 5 - 6 hours | 160° medium |
| Large cuts of Game | 7 - 9 lbs | 2½ - 3½ hours | 7 - 10 hours | 170° well done |
| Pork Roasts | 3 - 4 lbs<br>5 - 8 lbs | 2½ - 3½ hours<br>2½ - 3 hours | 7 - 10 hours<br>7 - 8 hours | 170°<br>170° |
| Pork/Beef Ribs | Full grill | 1½ - 2 hours | 4 - 6 hours | Meat pulls from bone |
| Pork Chops | Full grill | 1¾ - 1¼ hours | 4 - 6 hours | Meat pulls from bone |
| Sausage Links | Full grill | 2 - 2¾ hours | 4 - 5 hours | 170° for fresh sausage |
| Ham, Fresh | 10 lbs | 3 - 4 hours | 7 - 8 hours | 170° |
| Ham, Cooked | All sizes | 1½ - 2 hours | 3 - 4 hours | 130° |
| Chicken (Cut up or split) | 1 - 4 fryers, cut up or split | 1 - 1¼ hours | 4 - 5 hours | 180°/ leg moves easily in joint |
| Chicken (Whole) | 1 - 4 fryers | 1¼ - 1½ hours | 5 - 6 hours | 180°/ leg moves easily in joint |
| Turkey (Unstuffed) | 8 - 12 lbs | 1¾ - 2½ hours | 7 - 8 hours | 180°/ leg moves easily in joint |
| Fish, small whole | Full grill | ½ - ¾ hours | 2 - 3 hours | Flakes with fork |
| Fish, filets, steak | Full grill | ¼ - ½ hours | 1 - 3 hours | Flakes with fork |
| Duck | 3 - 5 lbs | 1 - 1¾ hours | 5 - 6 hours | 180°/ leg moves easily in joint |
| Small game birds | Full grill | ¾ - 1 hours | 4 - 5 hours | 180°/ leg moves easily in joint |

## SMOKED TURKEY:

- Empty cavity rinse and pat dry with paper towel.
- Tuck wing tips under the back and tie legs together.
- Place in center of cooking grid directly above foil drip pan of water.
- Smoke for 12 minutes per pound. Allow several extra minutes per pound if stuffed to allow for expansion.
- Use a meat thermometer for best results (190F internal).

## SMOKED HOT DOGS STUFFED:

- Rinse pieces in cold water and pat dry with paper towels.
- Brush each piece with vegetable oil and season to taste with salt and pepper.
- Brown pieces directly above coals with lid open and grate in high or medium position for several minutes.
- Then place pieces on cooking grate directly above drip pan.
- With the grate in the low position, cook with lid down for 55 to 60 minutes or until done. Do not use vegetable oil or salt and pepper if using marinade.

## SMOKED HOT DOGS STUFFED:

- Slit hot dogs lengthwise, within 1/4 inch of each end.
- Stuff hot dogs with cheese and relish and wrap in bacon.
- Place on cooking grid over drip pan and smoke 15-20 minutes or until bacon is crisp.

## SMOKED BAKED HAM:

- You can smoke fully cooked canned ham or smoked and cured whole ham or shank or butt portion.

Glaze
1 cup of light brown sugar, fimly packed
1/2 cup orange juice
1/2 cup honey

- Combine sugar, juice and honey. Let glaze sit for at least 4 hours.
- Place fire grate in the lowest position and a drip pan under the meat.
- Remove rind and score fat diagonally to give a diamond effect.
- Insert a whole clove into the center of every diamond.
- Place ham with fat side up in center of cooking grid directly above drip pan. Close lid.
- About 9 minutes per pound is suggested for fully cooked hams. Smoked or cured ham, which is not fully cooked, should be cooked to an internal temperature of 160°F
- Baste with ham glaze 3 or 4 times during last 30 minutes of cooking time.
- Garnish with pineapple rings about 15 minutes before end of cooking time.

## STEAK (& ALL MEATS):

Venison Marinade:
1 cup Balsamic or wine vinegar
1 cup olive oil
2 oz. Worcestershire
1/2 oz. Tabasco
2 tbsp. Season All
1-2 chopped jalapenos
3 oz. soy sauce

Bacon Marinade
2 oz. wine vinegar
2 oz. Worcestershire
4 dashes Tabasco
- Place leg of venison in a container or “hefty bag” and marinate for 2-4 days, turning daily. Marinate bacon overnight in its marinade.
- Remove roast from refrigerator at least an hour before cooking.
- Season generously with seasoned salt and coarse ground black pepper.
- Wrap 1 lb. Bacon over the top of the roast, and smoke 20/25 minutes per pound, or until tender. Do not overcook.

## SMOKED SHRIMP & CRAYFISH:

- Mix in a foil pan 1/2 cup butter, two cloves of crushed garlic, Tabasco, sliced green pepper, 1 tablespoon each of minced onions, salt and juices from one lemon.
- Add shrimp and/ or crayfi sh and smoke 45 minutes.

## SMOKED VEGETABLES:

- Turnips, potatoes, carrots, okra, mushrooms, peeled onions, zucchini, squash, etc.
- Put in pan and cover with water and cook for several hours while cooking the meat. Or place vegetables on grill and smoke for 50 minutes, either wrapped in foil or not.

## SMOKED FISH:

- Marinate in brine (1/4 cup dissolved in 1 qt of water) or marinate fi sh in 1 cup white wine, 1 cup soy sauce mixed with 1 cup lemon juice.
- Marinate overnight in covered dish in refrigerator.
- Let air on rack 20 minutes before placing on Pam-sprayed grill.
- Smoke 25 minutes.

## SMOKED SPARE/BACK RIBS:

- Peel off tough layer of skin on back side.
- Rub all surfaces with seasoning.
- Place ribs in center of grid above drip pan and smoke approximately 1 1/2 hours or until meat pulls away from bone.
- Baste with barbecue sauce during last 30 minutes.

## CHICKEN MARINADE:

Combine
1/2 cup soy sauce
1/4 cup vegetable oil
1/4 cup red wine vinegar
1 teaspoon oregano
1/2 teaspoon sweet basil
1/2 teaspoon garlic powder with parsley
1/4 teaspoon pepper

- Pour over chicken pieces in non-metal dish
- Cover and refrigerate overnight, turning occasionally. Use marinade to baste chicken while cooking.

## MEAT MARINADE: (For steaks, chops, and burgers)

Combine
¼ cup soy sauce
2 coarsely chopped large onions
2 cloves garlic (halved)

- Combine ingredients in an electric blender, cover, and process at high speed 1 minute or until mixture is very smooth.
- Stir in 1/4 cup bottle gravy coloring (Kitchen Bouquet and Gravy Master) and 2 teaspoons Beau Monde seasoning (or substitute 1 teaspoon MSG and 1 teaspoon seasoned salt).
- Allow meat to stand in marinade at room temperature for 2 hours or refrigerate up to 24 hours in a covered dish.
- Bring meat to room temperature before cooking.

## SHISH KABOB MARINADE:

Mix
1 cup soy sauce
1/2 cup brown sugar
1/2 cup vinegar
1/2 cup pineapple juice
2 teaspoons salt
1/2 teaspoon garlic powder
- Mix ingredients and bring to a boil.
- Marinate beef in mixture a minimum of 4 hours.

## Disposal

The packaging is made from environmentally friendly materials, which you can dispose of at your local recycling points.

Do not under any circumstance dispose of the grill in normal household waste! Dispose of it at approved disposal business or at your community disposal facility. Respect the currently valid regulations, If in doubt, get in touch with your disposal facility.

## Declaration of Conformity

This product is in compliance with the applicable America and national directives.

## Technical Details

| | |
|---|---|
| Model: | Royal Gourmet® CC1830F |
| Net Weight: | 53 lb |
| Overall Dimensions (Grill Assembled): | 45 x 27 x 48.4 inches (Lx W x H) |
| Cooking Area: | 782 square inches |
| Max. Amount of Fuel: | 6 lb charcoal for main chamber<br>4 lb charcoal for offset smoker |
| Steel Paint: | Heat - resistant up to 400°F |

## Warranty and Customer Service

Thanks for purchasing this Royal Goumet® Charcoal Grill. We are here to help you maximize your enjoyment and appreciation of your new grill. We provide a warranty for your product within the framework warranty condition under normal use of one year from the date purchase for all components covering defects and manufacturing errors.

Royal Gourmet's obligations are limited to the following:
- This warranty does not cover grills that have been altered or damaged due to normal wear, rust, abuse, improper maintenance, improper use, or modifications, to the product. Repair labor is not covered.
- This warranty does not cover surface scratches or heat damage to the finish which is considered as normal wear.
- All warranty claims apply only to the original purchaser and require a proof of purchase verifying date of purchase.
- All parts that meet the warranty requirements will be shipped at no-charge via the discretion of the customer service department.
- Do not return parts without prior to obtain return authorization from our customer service department.

Except as stated above, Royal Gourmet Corp makes no other express warranty.

This warranty may give you specific legal rights that vary by state.

Please do not hesitate to contact our customer service when you have any questions regrading assembly, warranty, or accessories. We will be happy to offer any replacement parts you need during the time of warranty period.

1 - 800 - 618 - 6798

service@royalgourmetusa.com

Mon - Fri, 8:30 AM - 5:30 PM, EST