Voss™ Technical Specification

Grab Bar YG5112, YG5118, YG5124

Stock Numbers:

- ☐ **YG5112CH – 12" Grab Bar**
  Chrome Finish
- ☐ **YG5118CH – 18" Grab Bar**
  Chrome Finish
- ☐ **YG5124CH – 24" Grab Bar**
  Chrome Finish
- ☐ **YG5112BN – 12" Grab Bar**
  Brushed Nickel Finish
- ☐ **YG5118BN – 18" Grab Bar**
  Brushed Nickel Finish
- ☐ **YG5124BN – 24" Grab Bar**
  Brushed Nickel Finish
- ☐ **YG5112ORB – 12" Grab Bar**
  Oil Rubbed Bronze Finish
- ☐ **YG5118ORB – 18" Grab Bar**
  Oil Rubbed Bronze Finish
- ☐ **YG5124ORB – 24" Grab Bar**
  Oil Rubbed Bronze Finish

Materials:

Grab Bar posts and bars are constructed of stainless steel.

Compliance:

- ADA, ANSI, ASTM, CSA
- Tested to 500lbs. pull

Dimensions:

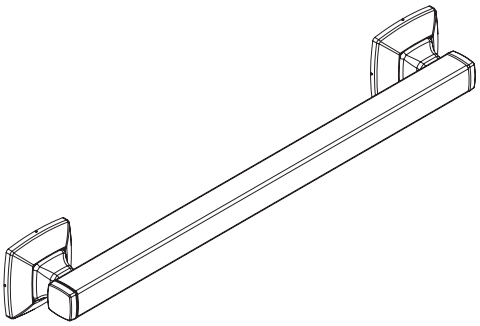

	Dim. A	Dim. B
YG5112	12	15.125
YG5118	18	21.125
YG5124	24	27.125

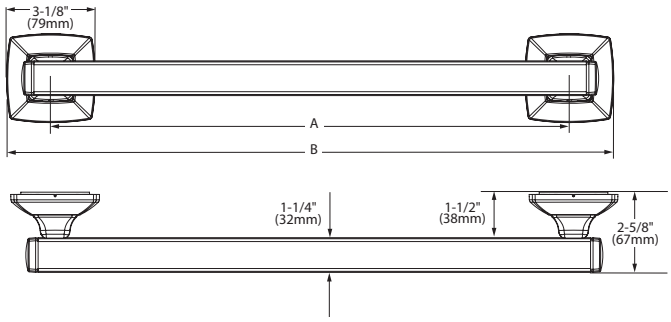

Installation Instructions:

1. Please note that screws MUST be mounted into a wood stud for secure installation.
2. Decide whether you would like to position your grab bar horizontally, vertically or at an angle, remembering that BOTH ends of the grab bar MUST be positioned over a wood stud (unless using secure mount anchors).
3. For easier installation and mounting remove 3 set screws from each flange and remove bar from SecureMount™ Flange.
4. Remove cover and re-assemble flange to bar by tightening 3 set screws.
5. Place grab bar and mark three mounting locations on each of the two grab bar flanges with a pencil.
6. Drill 1/8" diameter pilot holes at each screw location. Make sure to drill into the stud.
7. Install 3 screws and washers each SecureMount™ flange and tighten until secure. If desired, apply silicone caulk to the back of the SecureMount™ plate to guard against water penetration.
8. After screws are installed each side, dis-assemble bar from SecureMount™ flange by removing set screws.
9. Re-install covers.
10. Place bar over SecureMount™ flanges and tighten all set screws.
11. Snap on covers.

Cleaning Instructions:

To preserve the fine finish of this product, clean only with a soft damp cloth. Dry well. Do not use commercial or abrasive cleaners.

Stock Number: _____ **Grab Bar**
By MOEN

MOEN
Buy it for looks. Buy it for life.®

25300 AL MOEN DRIVE • NORTH OLMSTED, OH 44070
CORPORATE HEADQUARTERS: (800) 321-8809 • FAX: (800) 848-6636
INTERNATIONAL: (440) 962-2000 • FAX: (440) 962-2726
CUSTOMER SERVICE (USA): (800) 882-0116 • FAX: (888) 379-2720
WWW.MOEN.COM ©Copyright Moen, Inc.

01/25/2016 SPC1-1490 500002370
Released 01