EASTERN KING BED

ASSEMBLY INSTRUCTION

ASSEMBLY TIPS:

1.Remove harware from box and sort by size.

2.Please check to see that all hardware and parts are present prior to start of assembly.

3.Please follow attached instructions in the same sequence as numbered to assure fast& easy assembly.

warning

1.Don't attempt to repair or modify parts that are broken or defective please contact the store immediately.

2.This product is for home use only and not intended for commercial establishment.

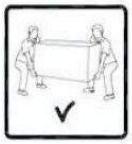

ASSEMBLY TIME PER UNIT:	20 MINUTES

PARTS IDENTIFICATION

A 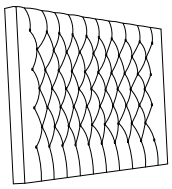 **Headboard** 1PC

B **SIDE PANEL LEFT** 1PC

C **SIDE PANEL RIGHT** 1PC

HARDWARE PACKAGE

1	Allen wrench 5*23*73mm		1 PCS
3	Headboard corner bracket-Right		1 PCS
4	Headboard corner bracket-Left		1 PCS
5	Short bolt 4.5cm		8 PCS
6	Hexagon socket screw 7cm	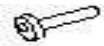	4 PCS

All above hardware pack is located in product

PARTS IDENTIFICATION

D	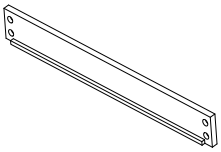	BED RAILS	2PC
E	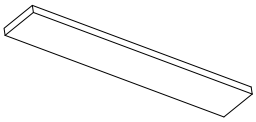	FOOTBOARD	1PC
F	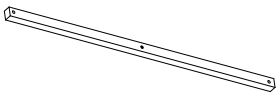	SLATS	5PC
G	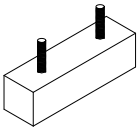	WOOD LEGS	2PC
H		SLAT SUPPORTS	5PC

HARDWARE PACKAGE

	DESCRIPTION	FIGURE	Q'TY
1	Allen wrench 5*23*73mm		1 PCS
2	Open-ended wrench		1 PCS
7	Bolt 9cm		8 PCS
8	Crescent Washer		8 PCS
9	Screw		8 PCS
10	Hexagon head bolt 5cm		4 PCS
11	Wood screw 3cm		10 PCS

All above hardware pack is located in product

STEP 1

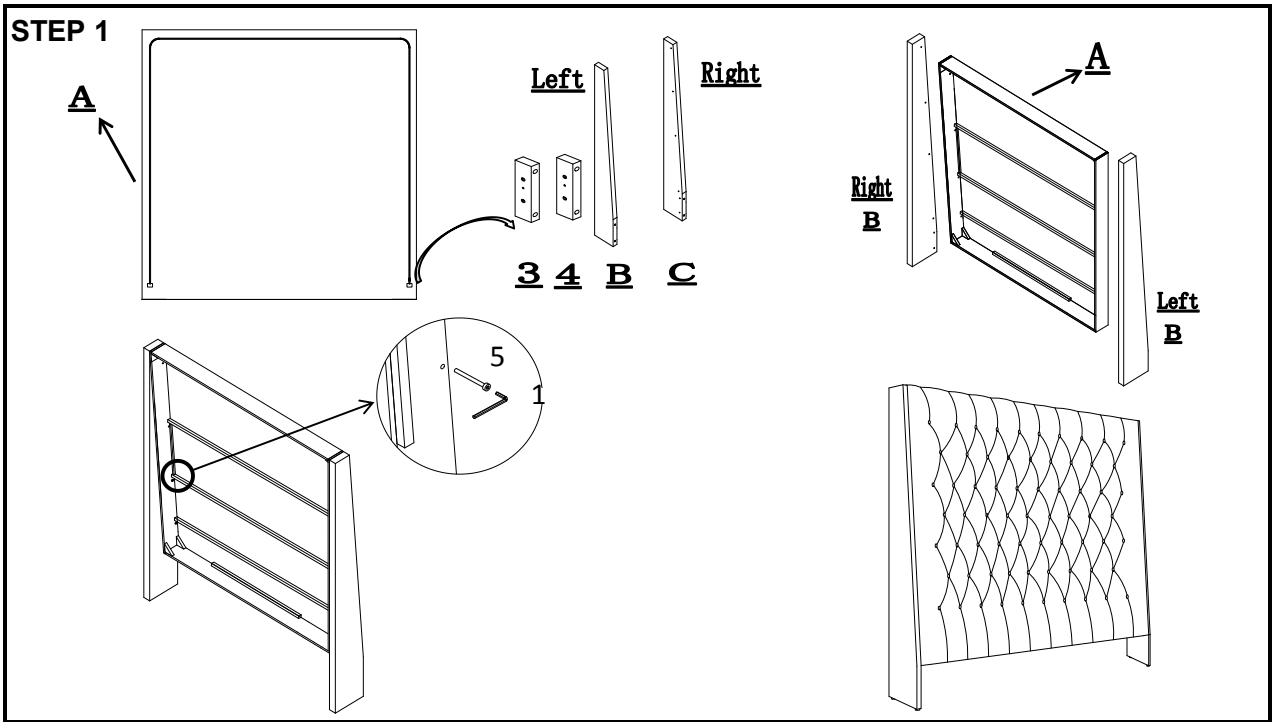

STEP 2

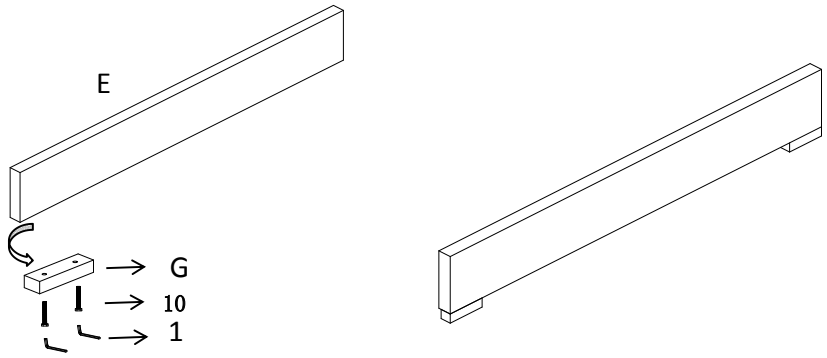

STEP 3

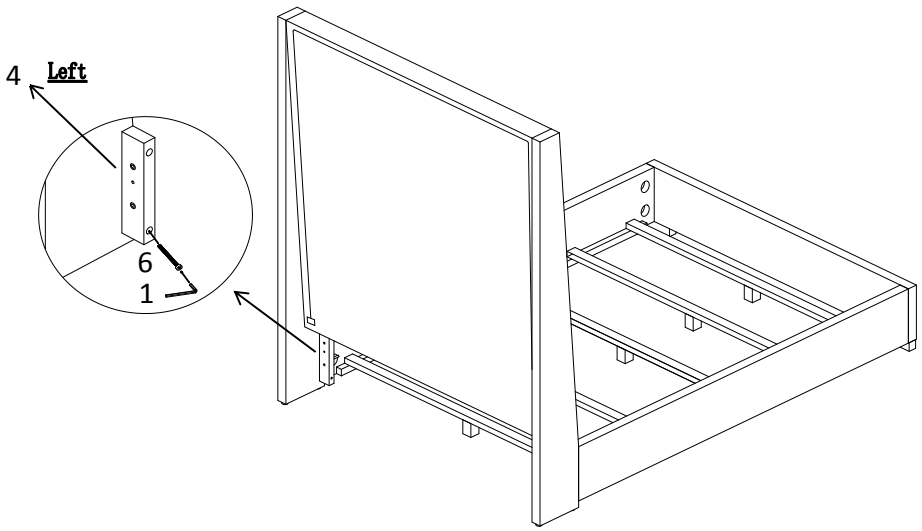

STEP 4

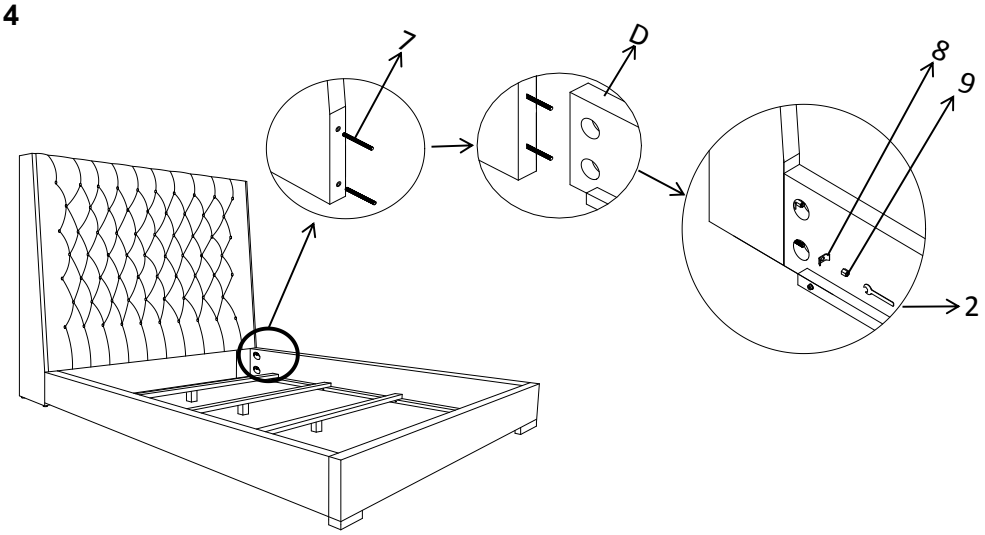

STEP 5

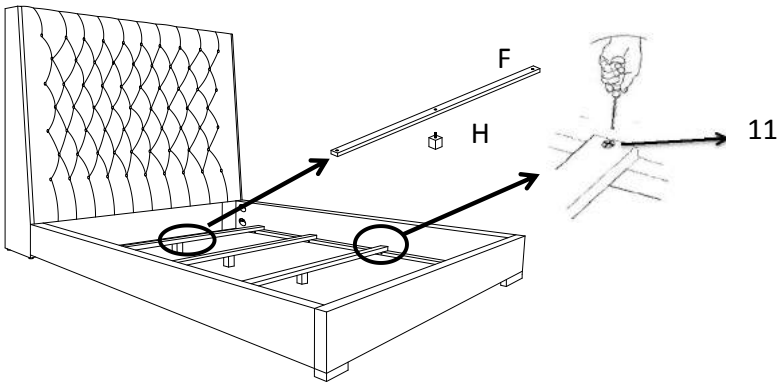
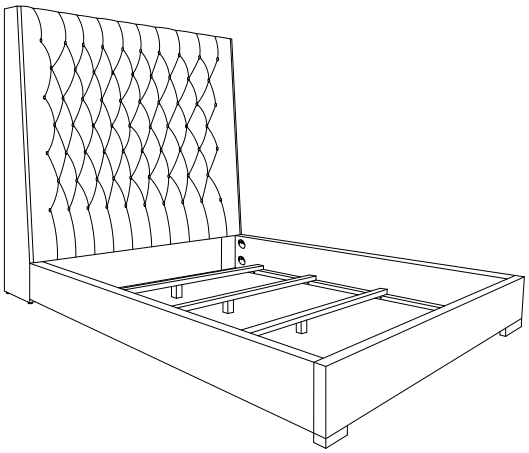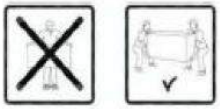
STEP 6