KS2170,1,2,3,6,7,8KL,KLVN
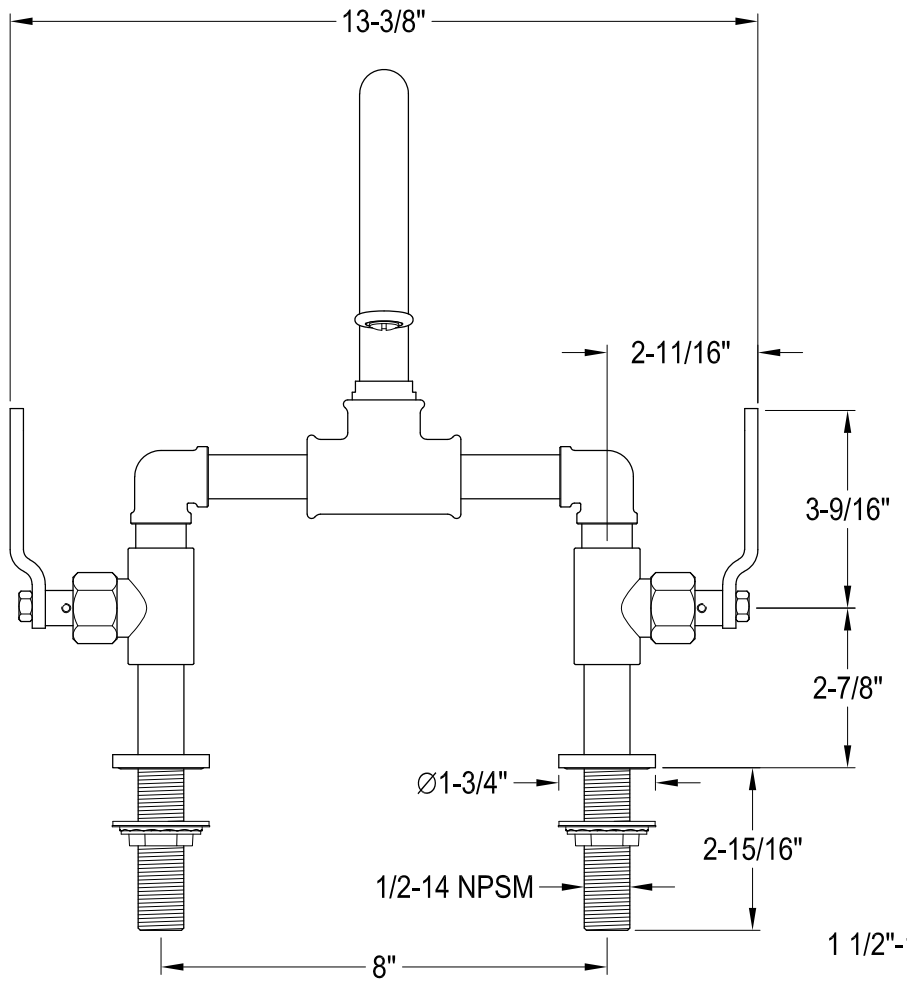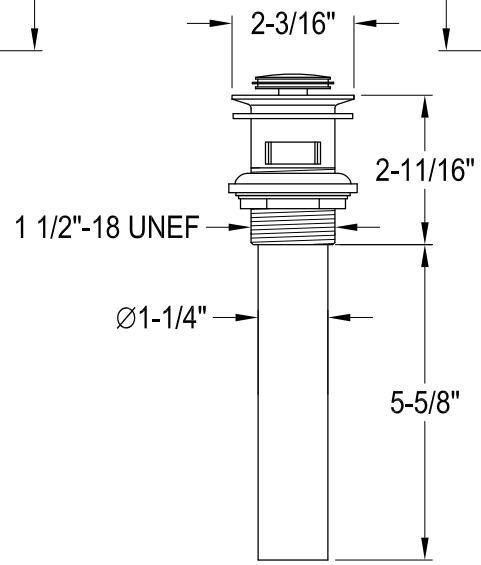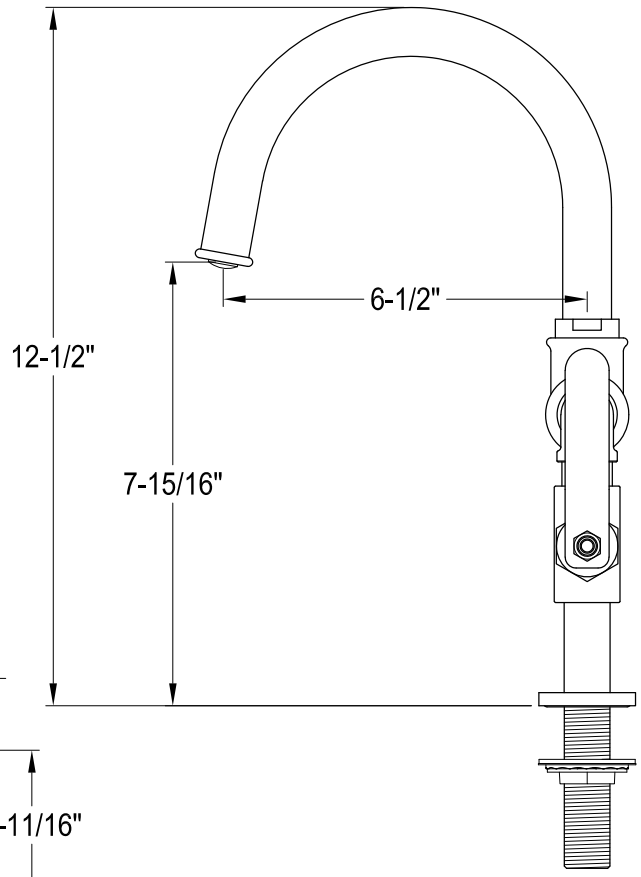
Twin Handles Lavatory Faucet With Push-up Pop-Up