D303130
Amalfi™ Two Handle Widespread Lavatory Faucet

SPECIFICATIONS

Features/Benefits

- Ceramic Disc Cartridge
- 7 9/16”High Spout, 3 9/16” Spout Reach Laminar Flow
- All Metal Touch-Down Drain Assembly
- 3-Hole Mount, 4” - 12” Installation
- 1.2 gpm (4.5 L/min) Maximum Flow Rate @60 psi

Available Color/Finishes

Color	Description
	Chrome

Please see danze.com or current price list for available finishes.
Finish is defined by additional suffix.

Standards & Certifications

NSF/ANSI 372

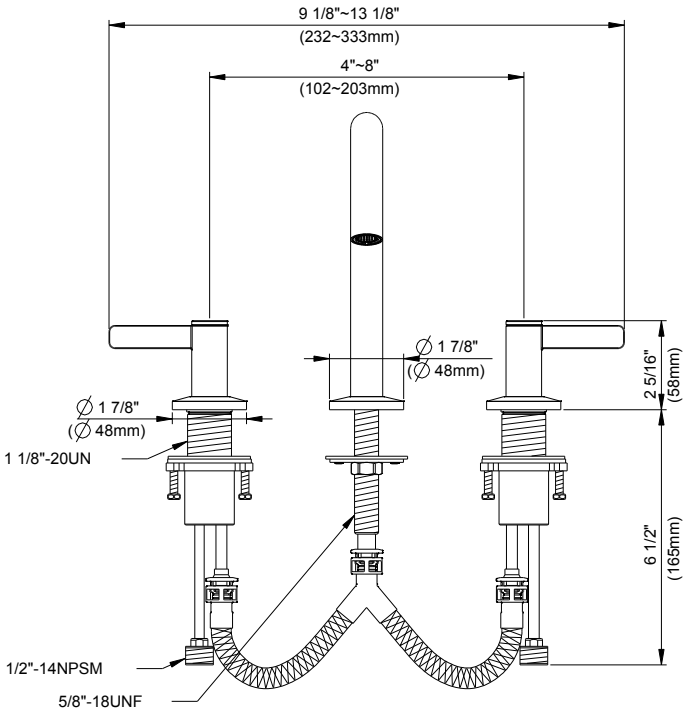

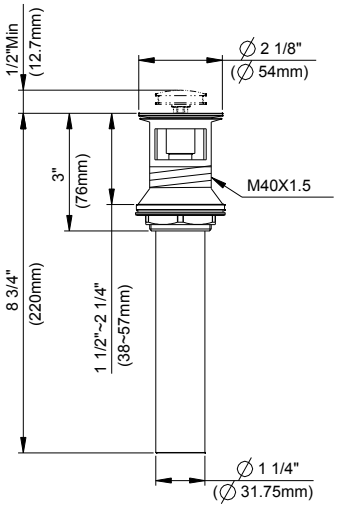

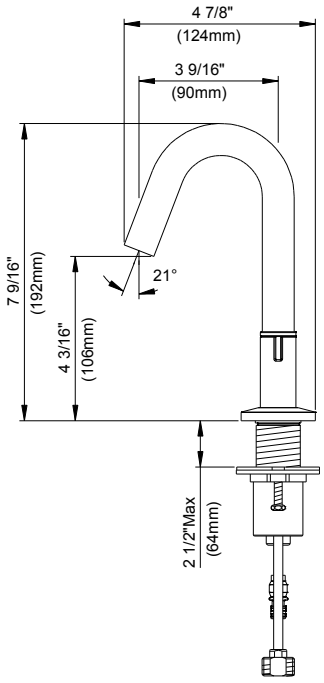

Submittal Information:

Name: _____ Contractor: _____

Location: _____ Contact #: _____

WARRANTY: Danze products are covered by a manufacturer’s lifetime limited warranty for manufacturing defects.

Danze, Inc., 2500 Internationale Parkway, Woodridge, IL 60517, USA www.danze.com