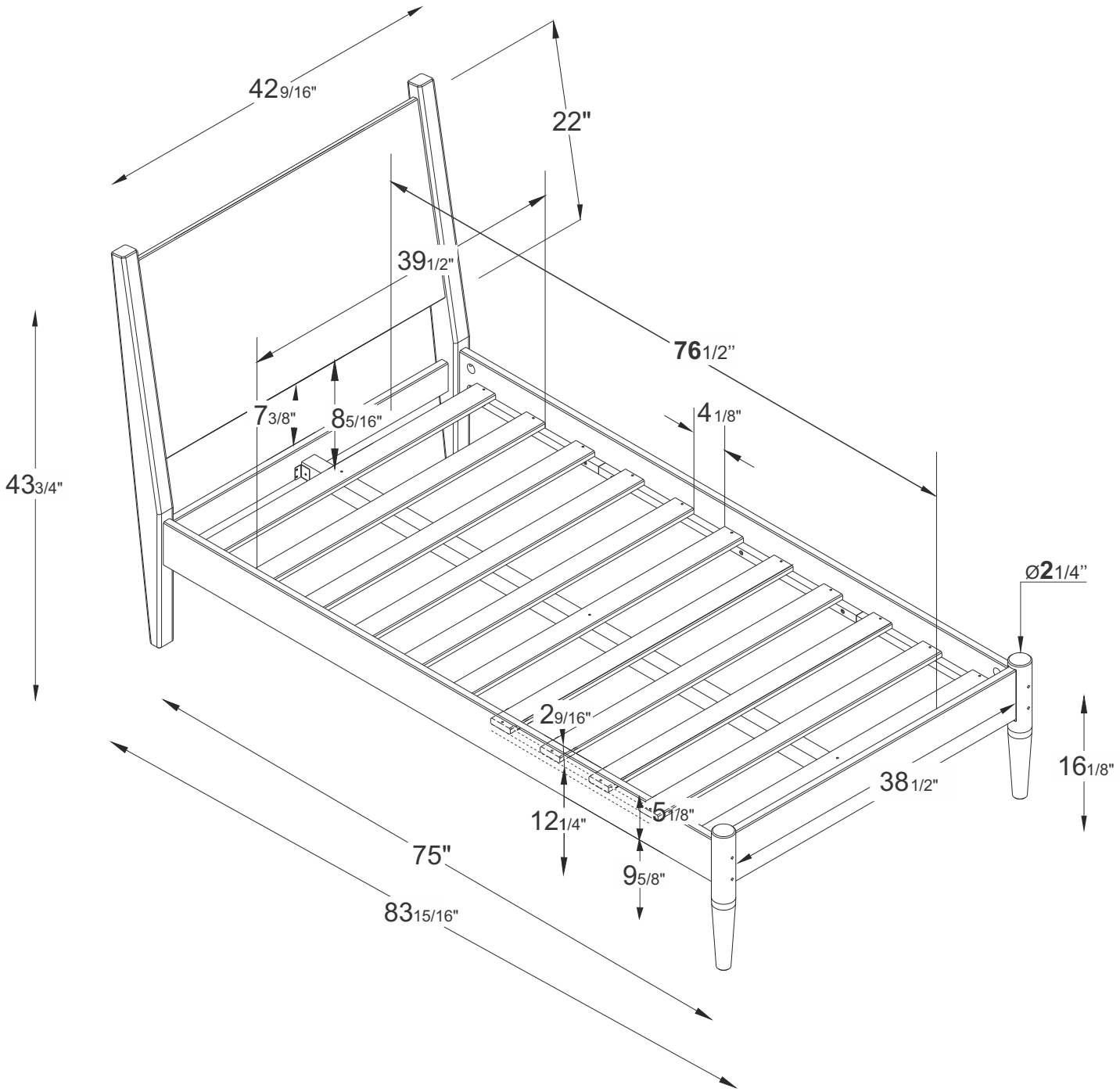
42 9/16"
22"
39 1/2"
76 1/2"
7 3/8"
8 5/16"
4 1/8"
43 3/4"
Ø2 1/4"
2 9/16"
16 1/8"
38 1/2"
5 1/8"
12 1/4"
9 5/8"
75"
83 15/16"