ITEM NO.	PART NUMBER	DESCRIPTION	QTY.
1	BPRDMR-4	BACK PLATE	1
2	HBBTT-78	HUB	5
3	TU12-6	TUBE	2
4	CARD-34	END CAP	1
5	RGSMD	CONNECTOR	1
6	Card-1	END LOCK	1
7	FTTDS	SWING SUPPORT	1
8	MRUBT-8	SWING TUBE	1
9	CARD-58	LOCK	2
10	BL1TL-12	END BALL	2
11	MROR34-8	MIRROR RING OUTSIDE	1
12	MRIN34-8.	MIRROR RING INSIDE	1
13	MIRROR	MIRROR	1
14	CN8-32 3D	HEX LOCK	2
15	CRRD-34	RING	4
16	CRRD-12	CHECKING RING	1

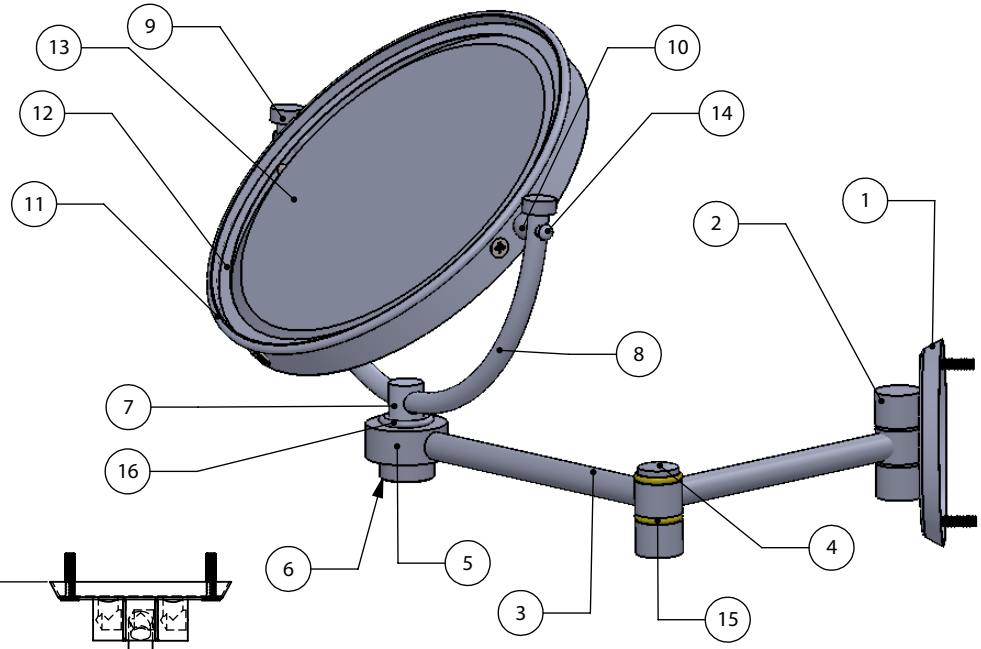

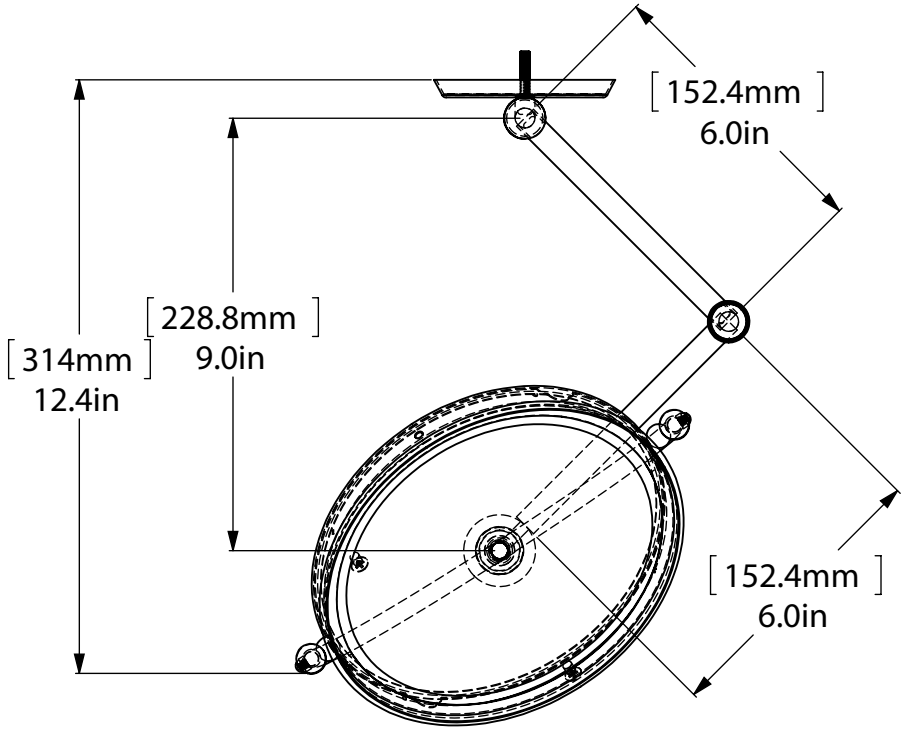

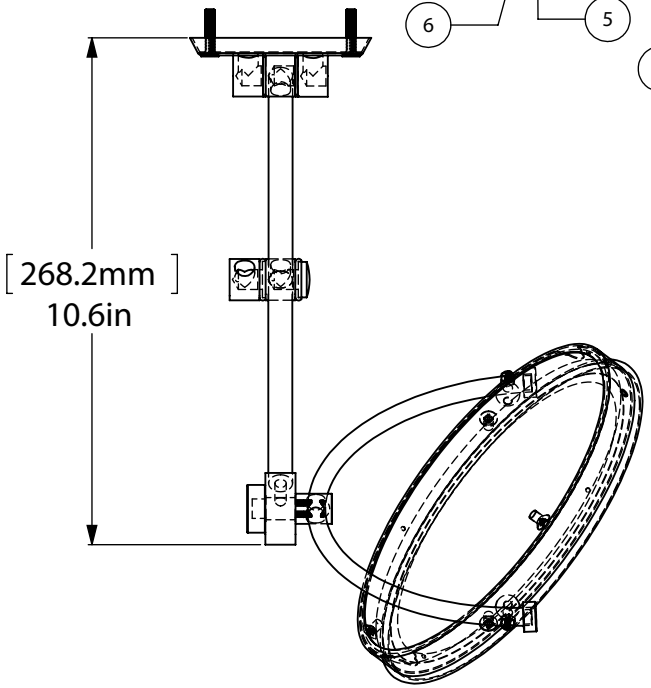

UNLESS OTHERWISE STATED											
DO NOT SCALE DRAWING	X.XXX	+/-0.025		INITIALS	DATE	ITEM	QTY	DRG/PART NO	CLIENT:		
CHAMFER ALL EDGES 0.5X45°	X.XX	+/-0.1	DESIGNED			MATERIAL	BRASS		WEIGHT	FINISH	TBD
DRAWING ISO	X.X	+/-0.25	DRAWN			HEAT TREAT	NA			QUANTITY	
	X	+/-0.75	CHECKED			CUSTOMER			CUSTOMER No	---	
	ANGLES		PROJ.ENG			DESCRIPTION:				DRAWING No.	REV
	X.XX	+/-0.05°	SAFETY								0
	X.X	+/-0.1°	APPROVED								
	X	+/-0.5°	FILENAME							SCALE 1:4	SHEET: 01 A4
FIRST ANGLE PROJECTION	MACHINED FINISH	3.2									