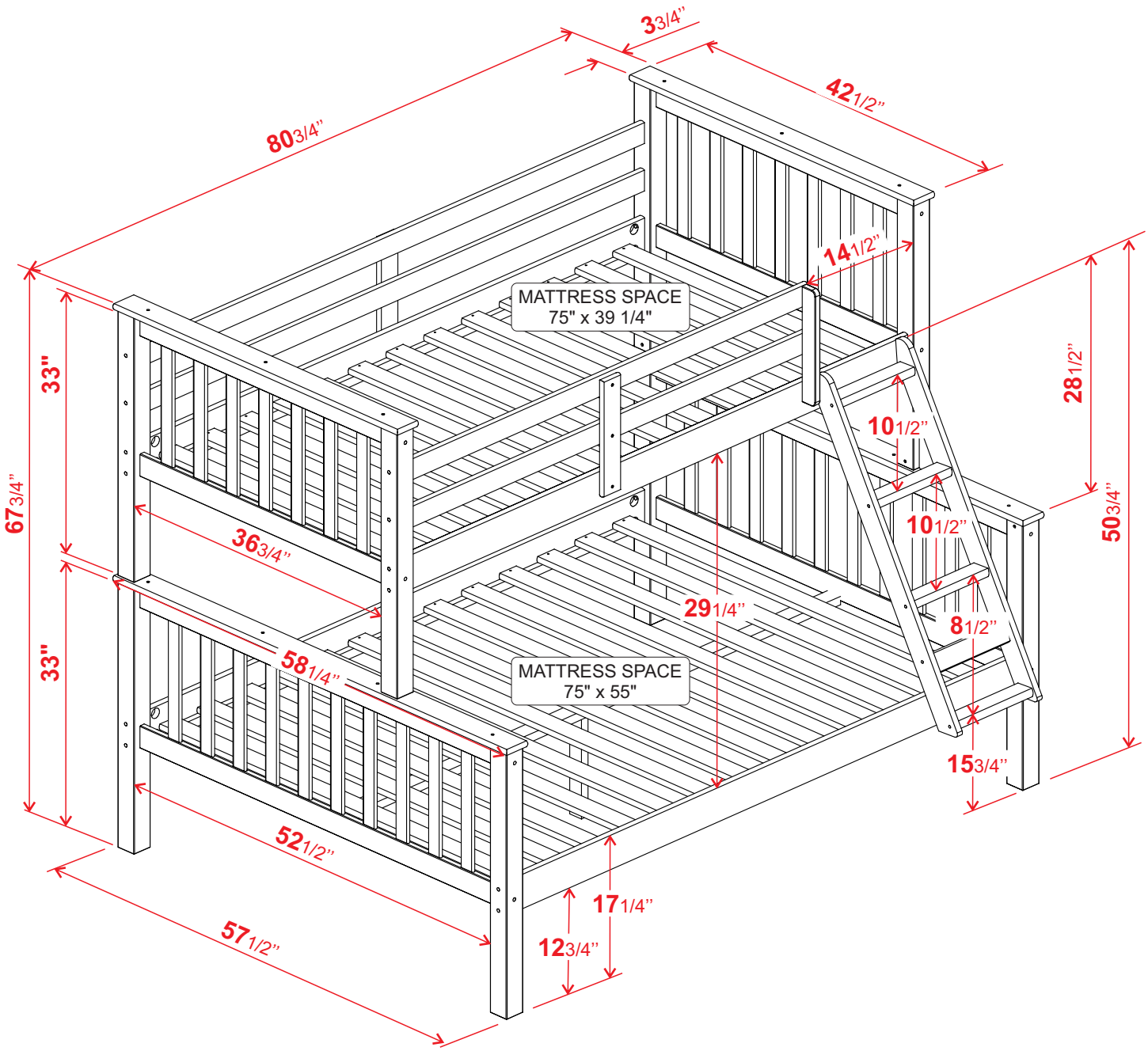Product dimension sheet
KD-Mission
Twin Over Full Bunk Bed