D304119
Avian™ Two Handle Widespread Lavatory Faucet

SPECIFICATIONS

Features/Benefits

- 1.2 gpm (4.5 L/min) Max Flow @ 60 psi with Laminar Water Stream
- Alternative Flow Rates Available with Spray Water Stream
  - 1.0 gpm (3.8 L/min) When Used with DA613082N Aerator
  - 0.5 gpm (1.9 L/min) When Used with DA613081N Aerator
- 3 9/16” Spout Height, 5 5/8” Spout Reach
- Ceramic Disc Cartridge
- Includes Metal Touch-Down Drain Assembly
- 3-Hole Mount
- 6”- 12” Installation
- Optional Temperature Indicators Included

Available Color/Finishes

Color	Description
	Chrome

Please see danze.com or current price list for available finishes.
Finish is defined by additional suffix.

Mount Type

6"-12"

Standards & Certifications

NSF/ANSI 372

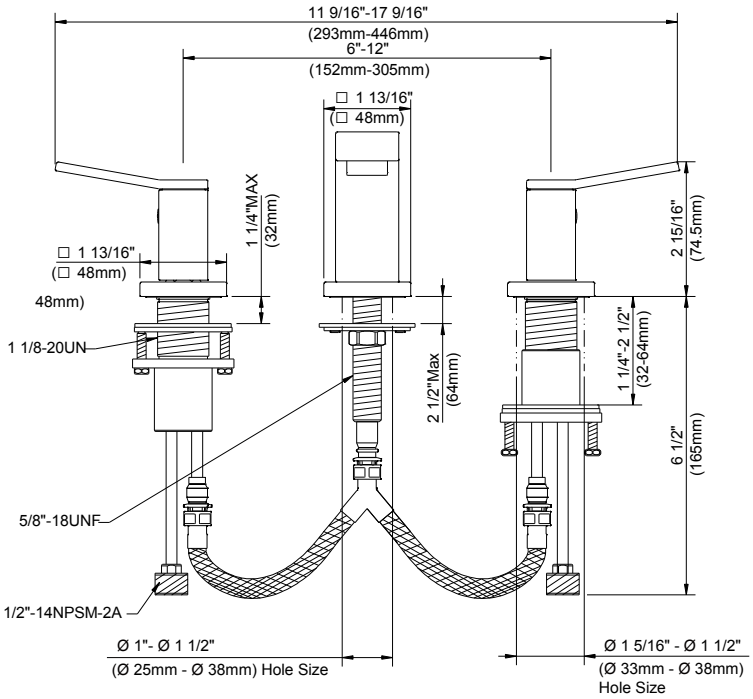

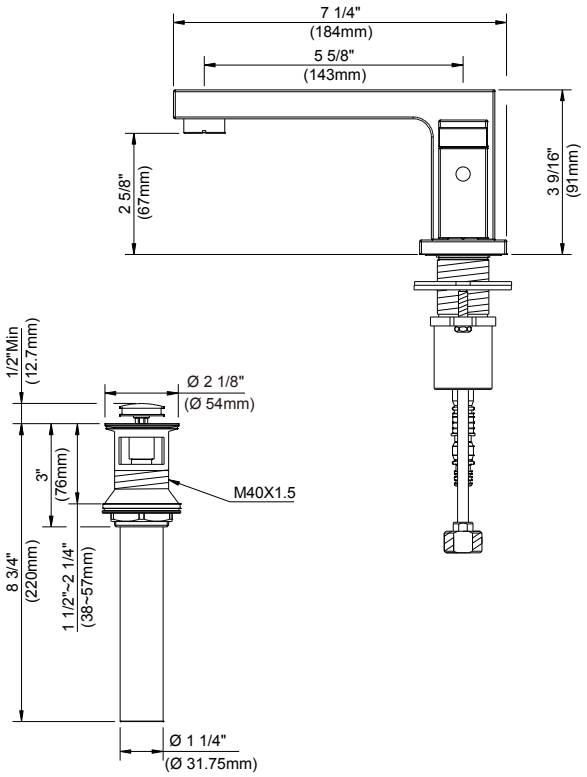

Submittal Information:

Name: _____ Contractor: _____

Location: _____ Contact #: _____

WARRANTY: Danze products are covered by a manufacturer’s lifetime limited warranty for manufacturing defects.