KS3030,1,2,3,5,6,7,8BX
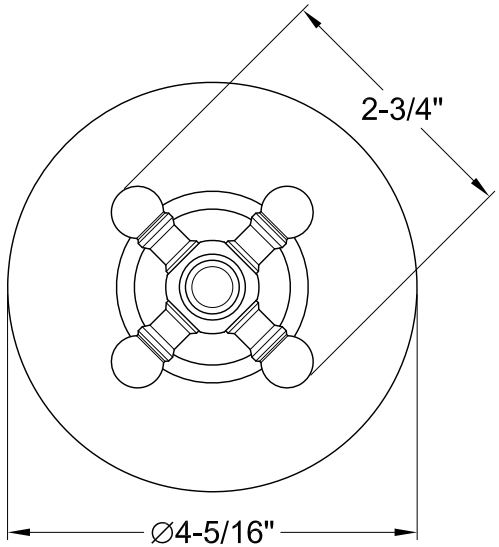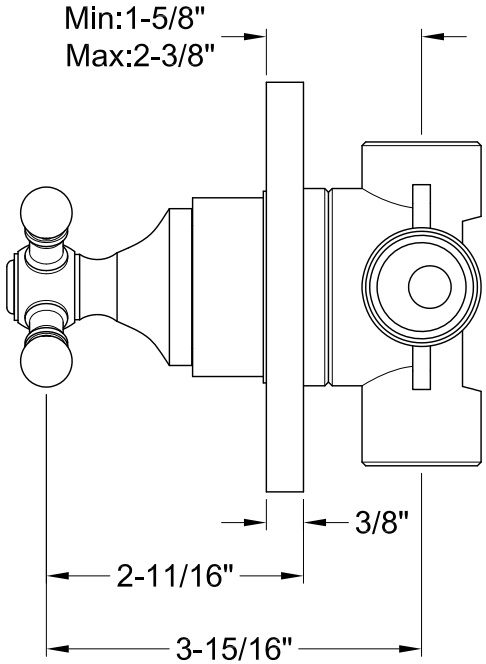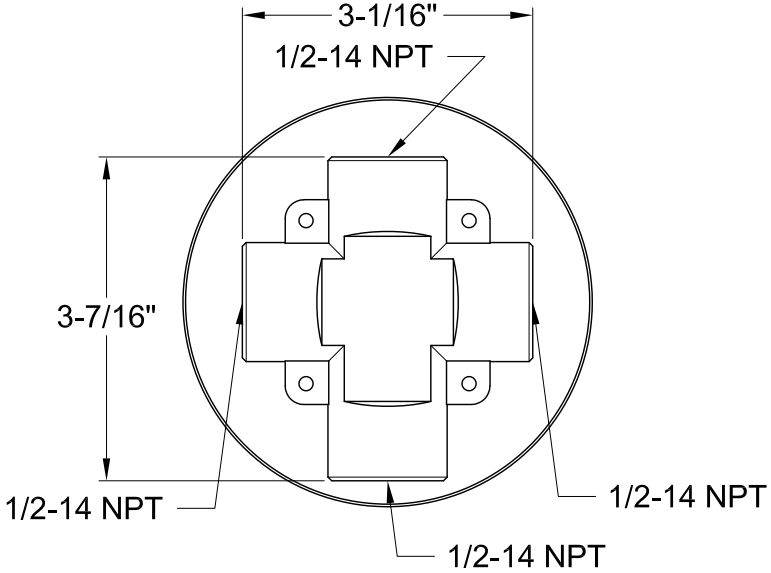
Three-Way Diverter Valve With Single Handle & Round Plate