MOEN
Buy it for looks. Buy it for life.®

Specifications

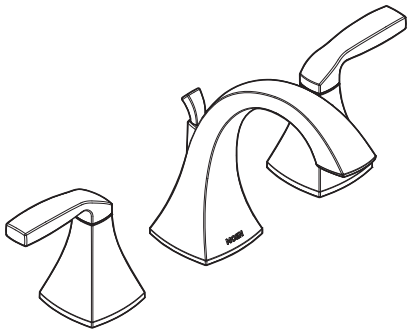

VOSS™
Two Handle Widespread Lavatory Faucet

Models: T6905 series

Valve: 9000, 69000

NOTE: THIS FAUCET IS DESIGNED TO BE INSTALLED THRU 3 HOLES, 1-1/8" MIN. DIA.

WaterSense Meets EPA Criteria
Certified by IAPMO R&T

DESCRIPTION
- Metal construction with various finishes identified by suffix
- 1/2" IPS connections
- Hot and cold temperature indicators available
- Includes metal pop-up waste assembly

OPERATION
- Lever style handles
- Maximum handle rotation angle is 90˚ to full on for either handle
- Hot side counterclockwise to open (clockwise to close)
- Cold side clockwise to open (counterclockwise to close)

FLOW
- Flow is limited to 1.5 gpm max (5.7L/min) at 60 psi

CARTRIDGE
- 1224 cartridge design
- Nonmetallic, nonferrous and stainless steel material

STANDARDS
- Third party certified to WaterSense,® ASME A112.18.1/CSA B125.1, and all applicable requirements referenced therein including NSF61/9
- Contains no more than 0.25% weighted average lead content
- Complies with California Proposition 65 and with the Federal Safe Drinking Water Act
- **ADA** for lever handles

WARRANTY
- Lifetime limited warranty against leaks, drips and finish defects to the original consumer purchaser
- 5 year warranty if used in commercial installations

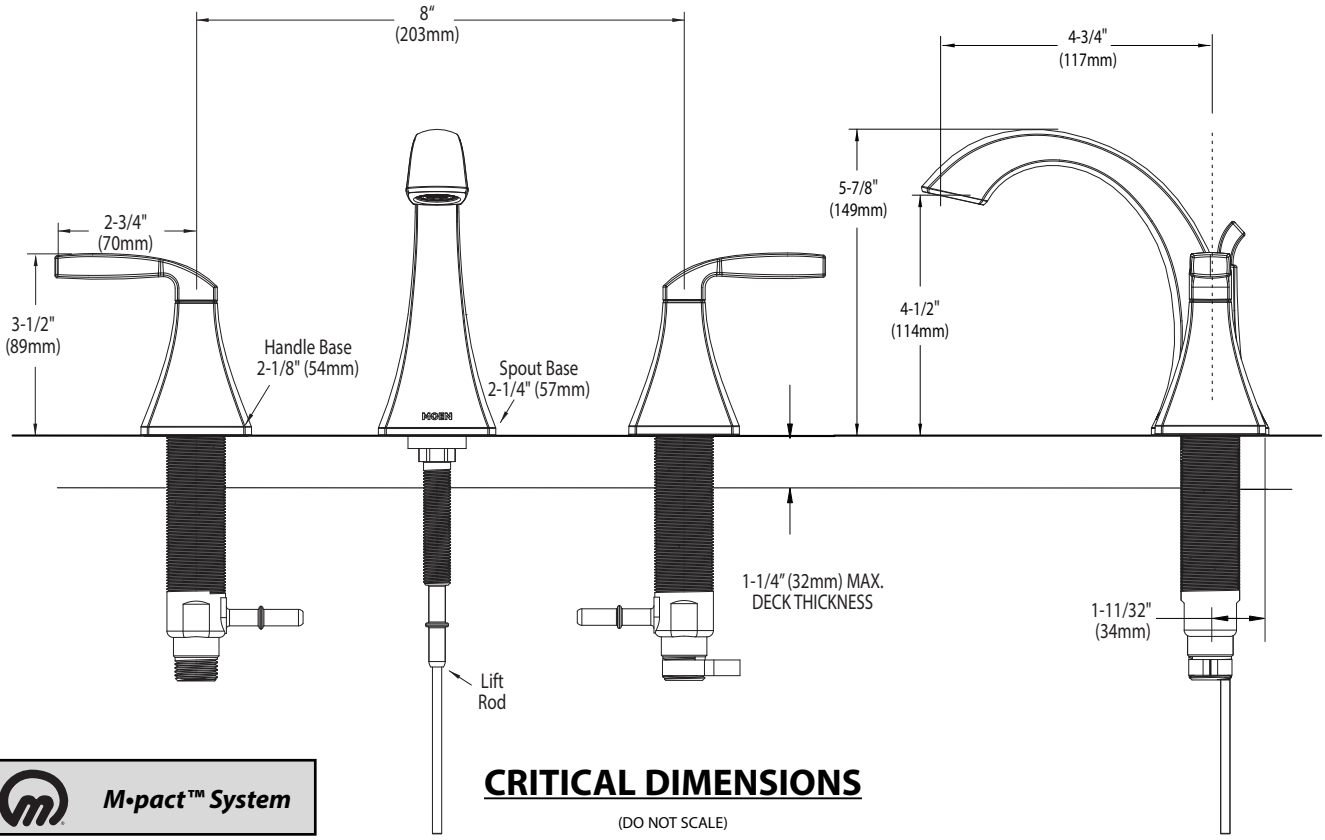

M•pact™ System

CRITICAL DIMENSIONS
(DO NOT SCALE)

FOR MORE INFORMATION CALL: 1-800-BUY-MOEN
www.moen.com

6/13

TI-SPCIFICS SPC1375 S000014535
Released14