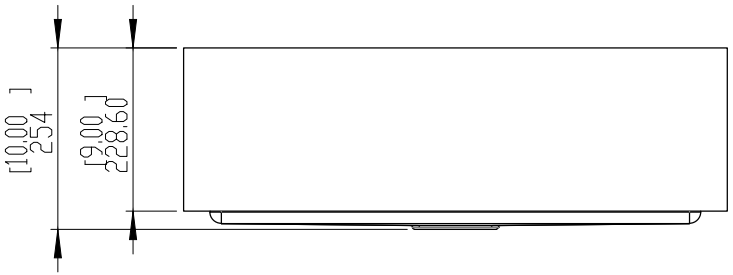
[10.00]
254
[9.00]
228.60

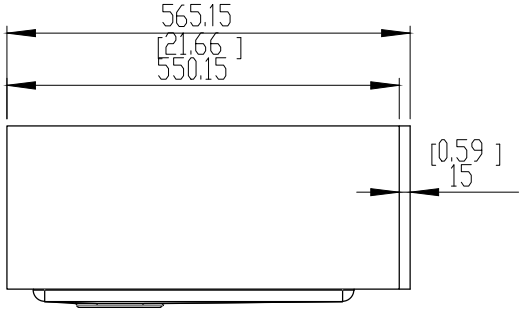
565.15
[21.66]
550.15
[0.59]
15

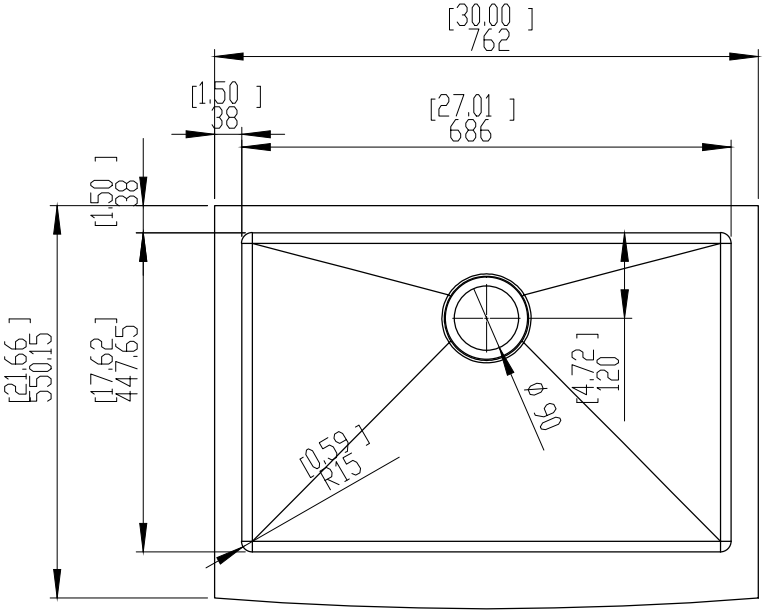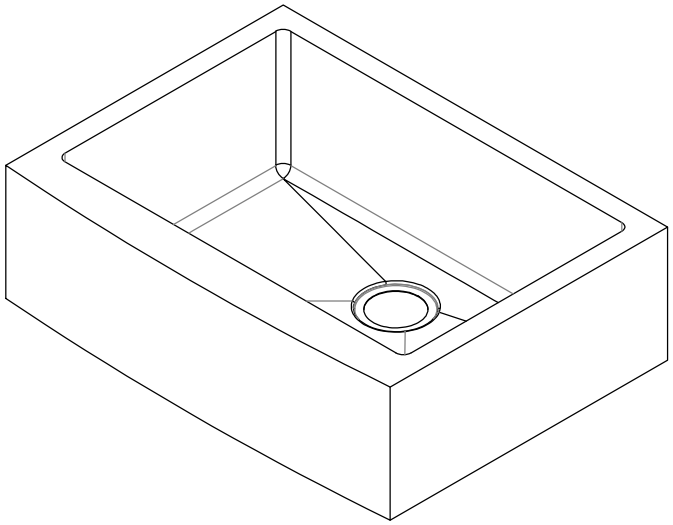
[30.00]
762
[1.50]
38
[27.01]
686
[1.50]
38
[21.66]
550.15
[17.62]
447.65
[4.72]
120
Φ90
[0.59]
R15