KS4471,2,5,8ZX
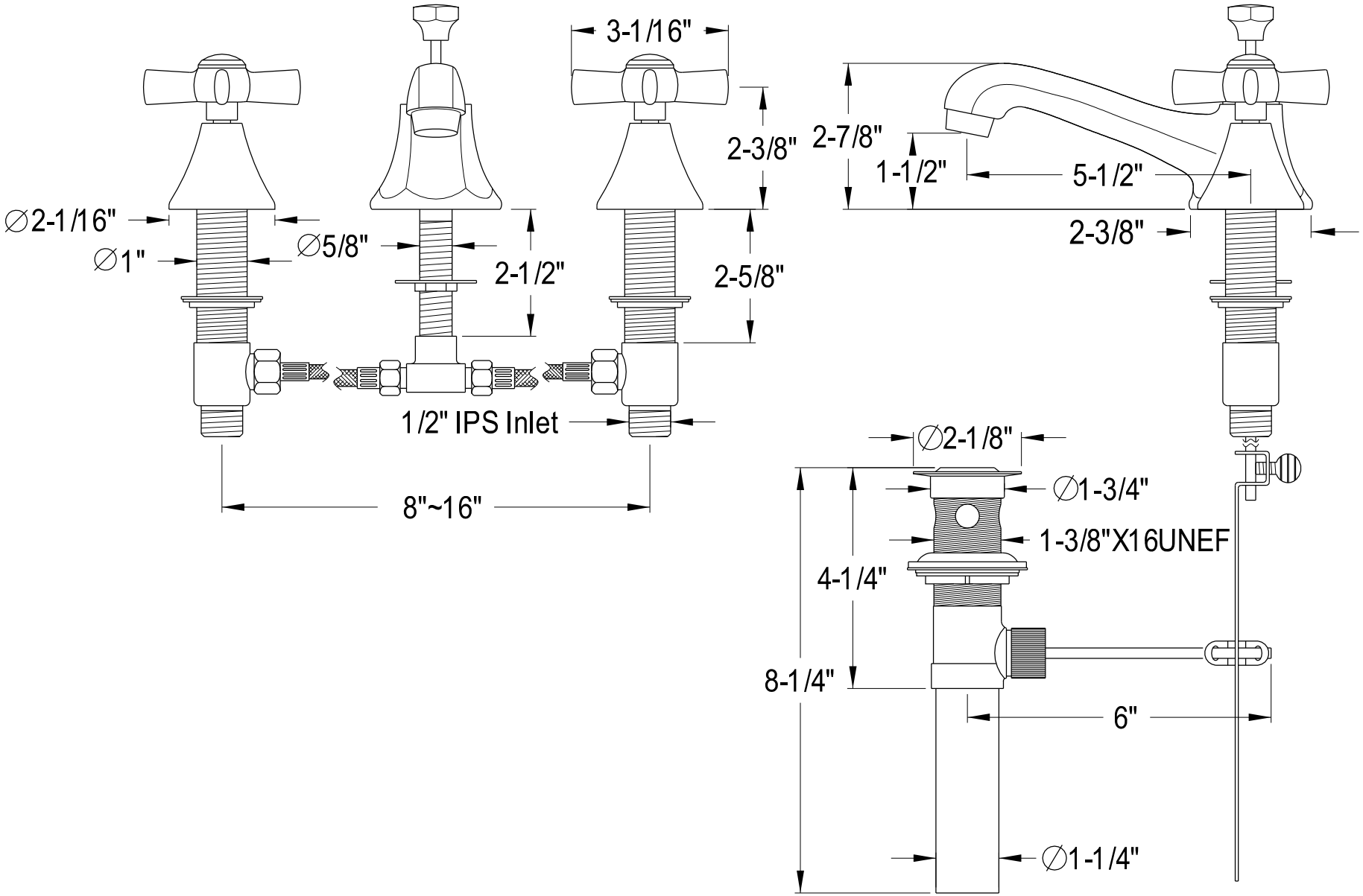
Widespread Lavatory Faucet With Brass Pop-Up