Cheviot

200 - 1594 Kebet Way
Port Coquitlam, BC
Canada V3C 5M5

Tel: 1-800-444-5969
Fax: 604-464-8993
Toll Free: 1-800-444-5969
Toll Free Fax: 1-800-211-2555

help@cheviotproducts.com
cheviotproducts.com

Manhattan Drop-In Basin

#1187 | 21 5/8" x 17 3/4

Cheviot Products' vitreous china lavatories are finely crafted for outstanding beauty and practicality. Fired onto each sink is a fine glaze of powdered glass to ensure a lifetime of durability, ease of cleaning, and resistance to bacteria and other microbes.

Colours
White

Drillings
Single hole only

Note
Rough-in dimensions may vary +/- 1/2" and are subject to change.
No responsibility is assumed by Cheviot Products Inc.
One Year Limited Warranty against manufacturer's defects.

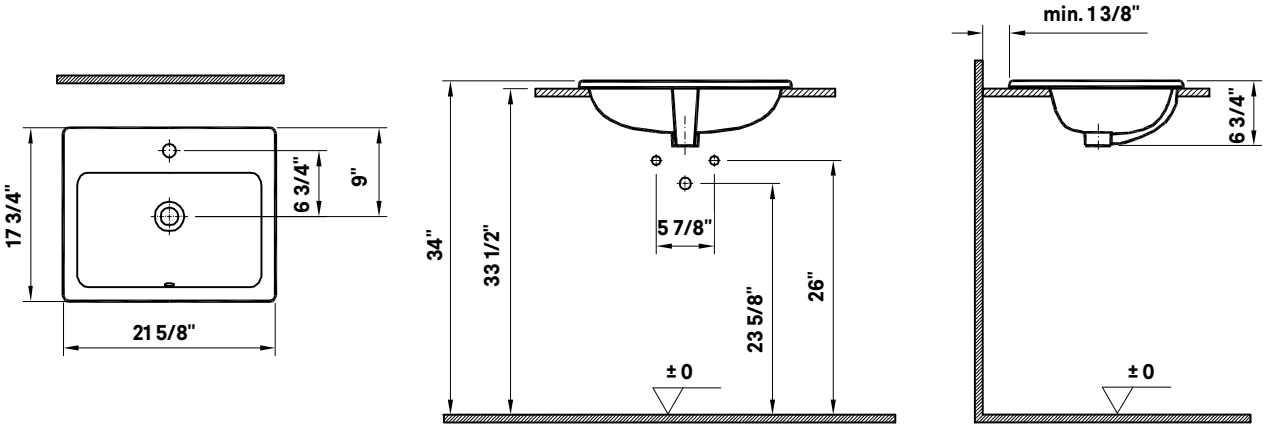

Related Products

#5214 City Single Hole Lavatory Faucet

#5216 Metro Single Hole Lavatory Faucet