KB6630,1,2,5,7,8CML
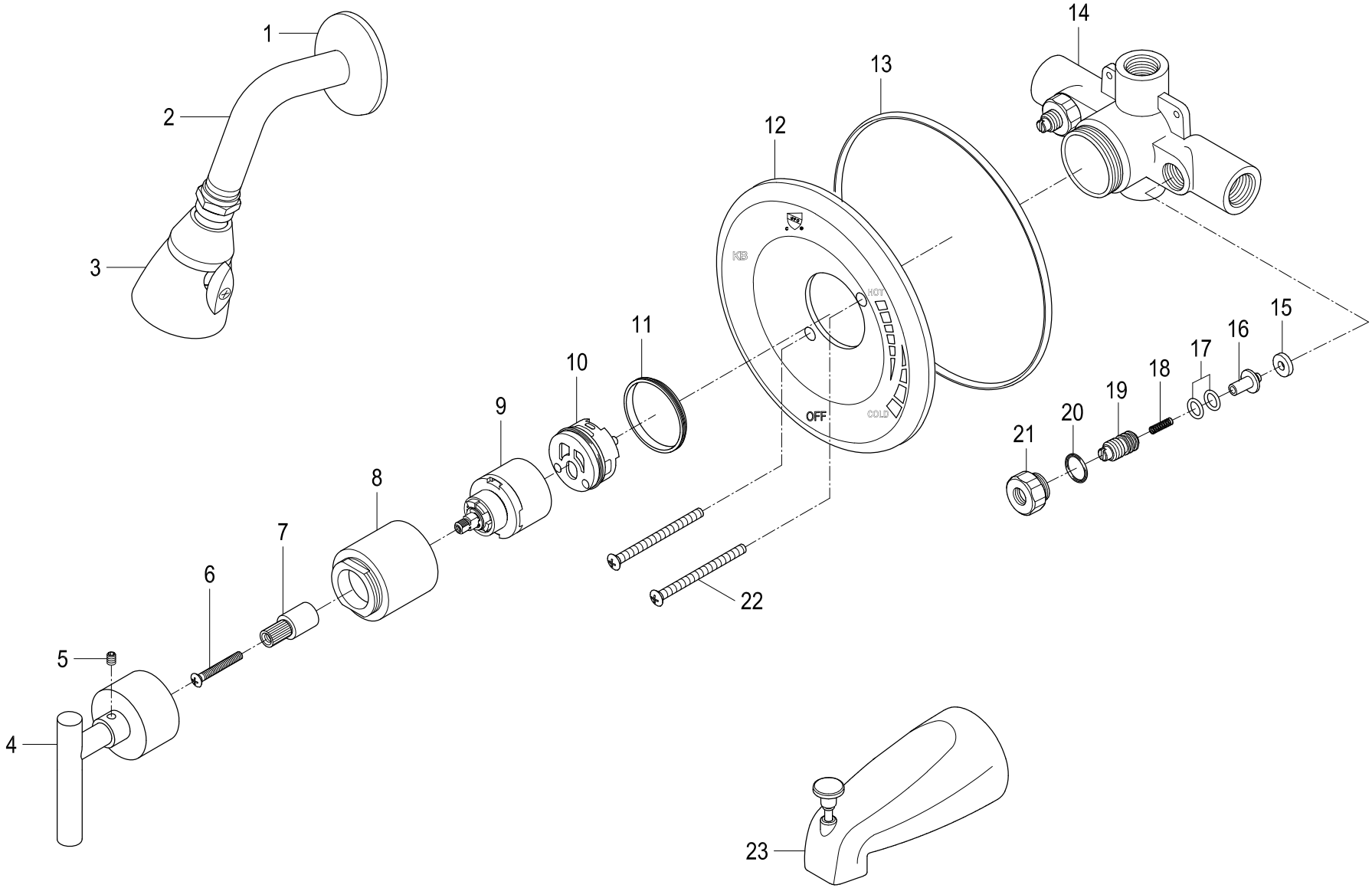
Single Handle Pressure Balanced Tub & Shower Faucet