MOEN®

Specifications

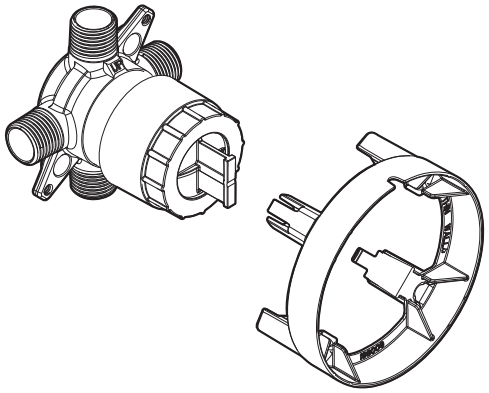

M-CORE™
4 Port Rough-In Valve

DESCRIPTION
- Brass Construction
- Available with ½" CC/IPS, PEX, Cold Expansion PEX, or CPVC Connections
- Shower outlet matches inlet connection type
- Tub outlet is CC/IPS

OPERATION
- Supplied Flush Plug allows testing up to 200 PSI with air (300 PSI water)
- Installation in thin or thick wall applications

CARTRIDGE
- Cartridge is supplied in the M-CORE™ Trim Kit

STANDARDS
- Third party certified to meet ASME A112.18.1/CSA B125.1, and all applicable requirements referenced therein

WARRANTY
- Lifetime limited warranty against leaks, drips and finish defects to the original homeowner
- 10 year limited warranty when used in a multifamily installation
- 5 year limited warranty when used in a commercial installation

Visit www.moen.com/support for complete details and limitations

Models:	Inlet Connection
U140CI	CC/IPS
U140X	PEX
U140CX	Cold Expansion PEX
U140V	CPVC

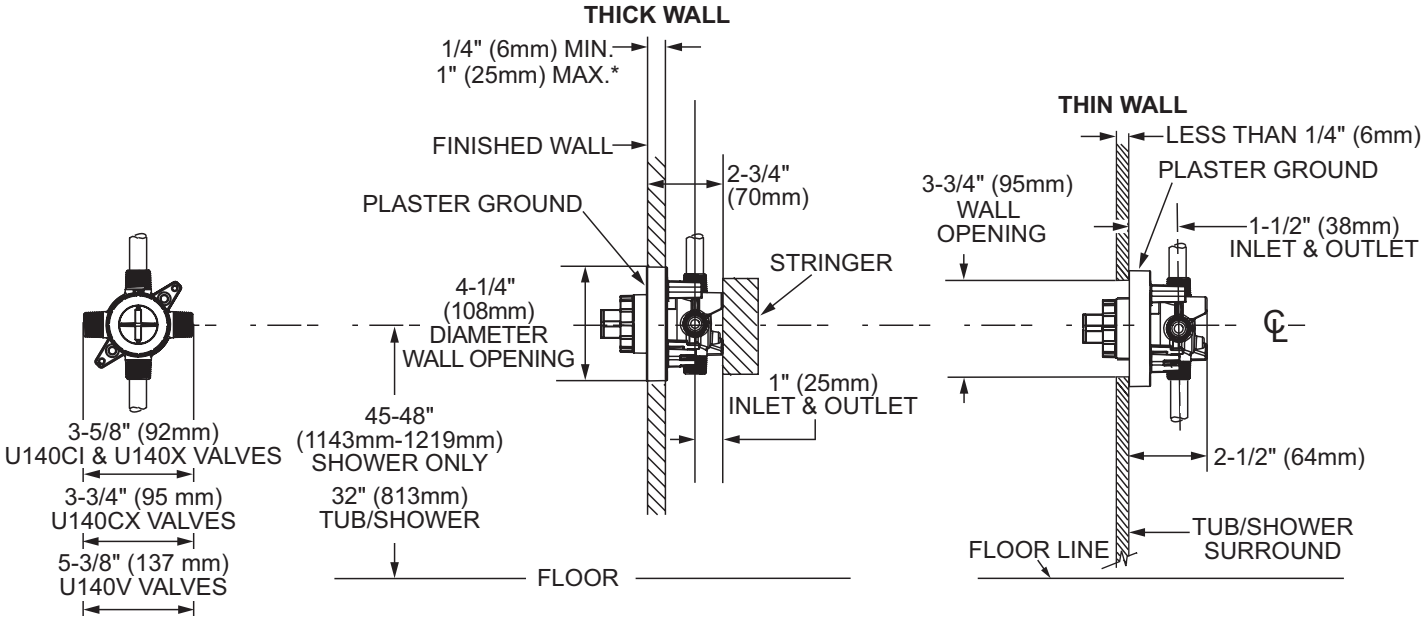

M•pact System

* Walls thicker than 1" (25mm) require optional extension kit.

CRITICAL DIMENSIONS
(DO NOT SCALE)

FOR MORE INFORMATION CALL: 1-800-BUY-MOEN
www.moen.com

5/20