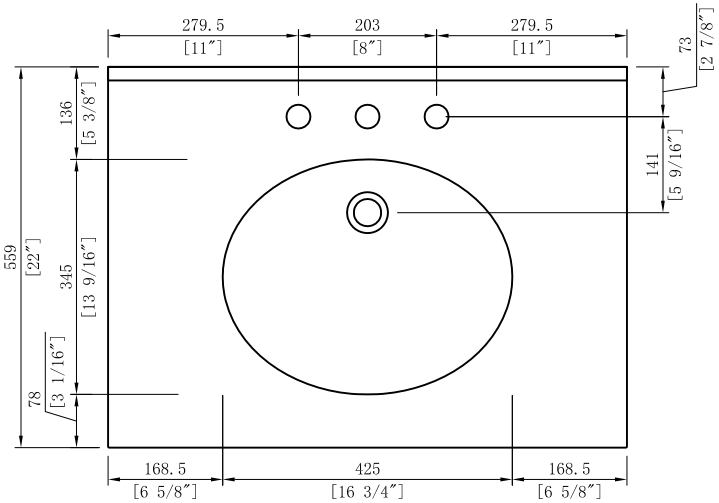
279.5
[11″]
203
[8″]
279.5
[11″]
73
[2 7/8″]
136
[5 3/8″]
141
[5 9/16″]
559
[22″]
345
[13 9/16″]
78
[3 1/16″]
168.5
[6 5/8″]
425
[16 3/4″]
168.5
[6 5/8″]

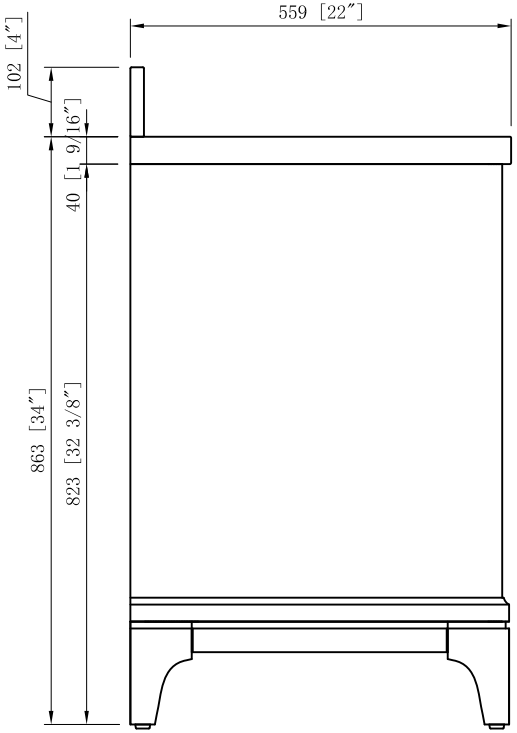
559 [22″]
102 [4″]
40 [1 9/16″]
863 [34″]
823 [32 3/8″]

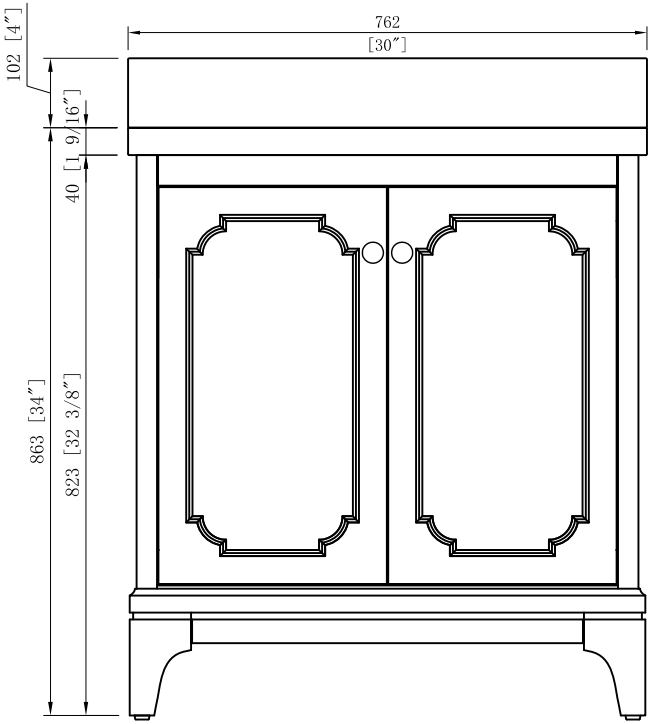
762
[30″]
102 [4″]
40 [1 9/16″]
863 [34″]
823 [32 3/8″]

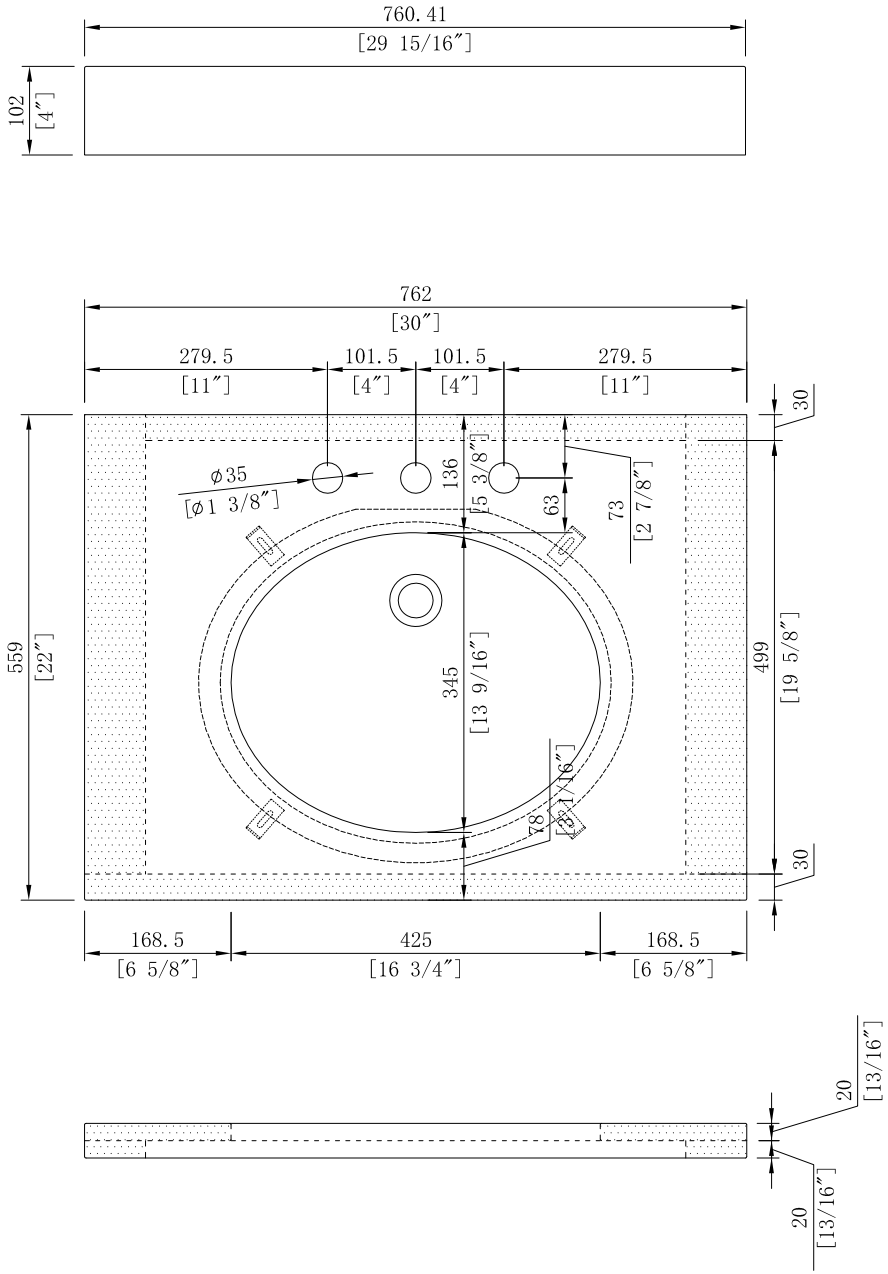
760.41
[29 15/16″]
102
[4″]
762
[30″]
279.5
[11″]
101.5
[4″]
101.5
[4″]
279.5
[11″]
30
ϕ35
[ϕ1 3/8″]
136
[5 3/8″]
63
73
[2 7/8″]
559
[22″]
345
[13 9/16″]
499
[19 5/8″]
78
[3 1/16″]
30
168.5
[6 5/8″]
425
[16 3/4″]
168.5
[6 5/8″]
20
[13/16″]
20
[13/16″]

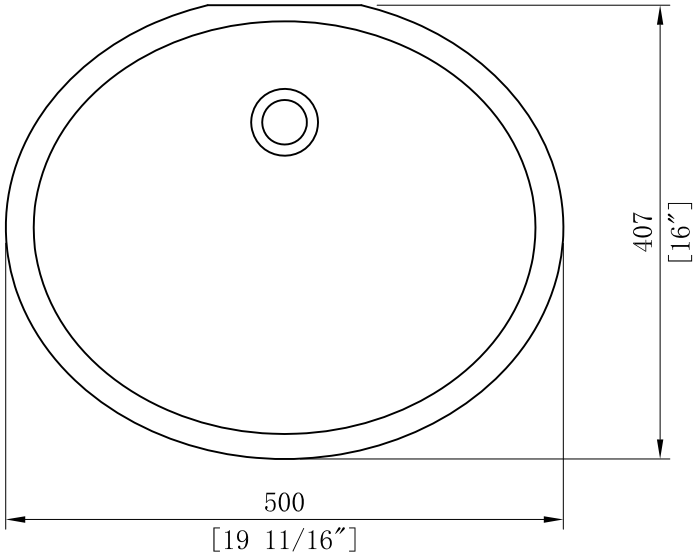
407
[16″]
500
[19 11/16″]

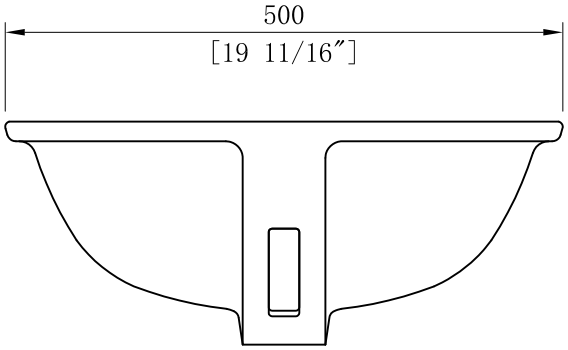
500
[19 11/16″]

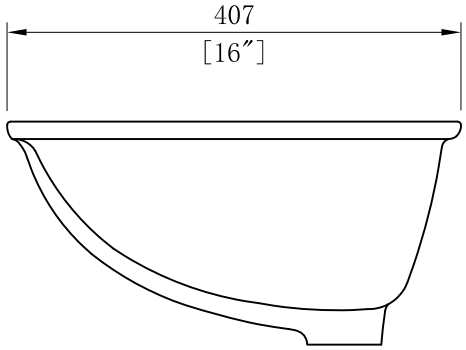
407
[16″]

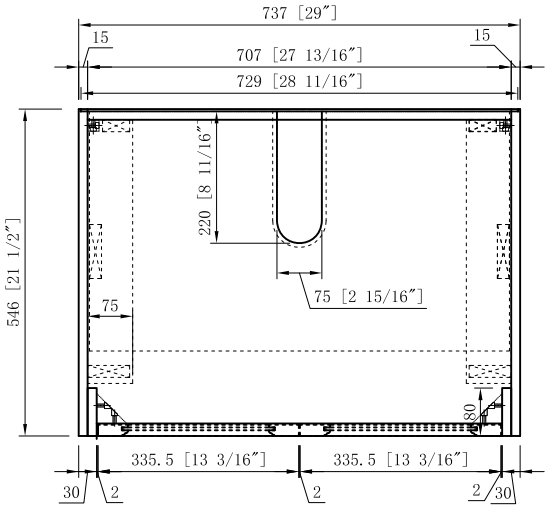
737 [29″]
15
15
707 [27 13/16″]
729 [28 11/16″]
546 [21 1/2″]
220 [8 11/16″]
75 [2 15/16″]
75
80
335.5 [13 3/16″]
335.5 [13 3/16″]
30
2
2
2
30

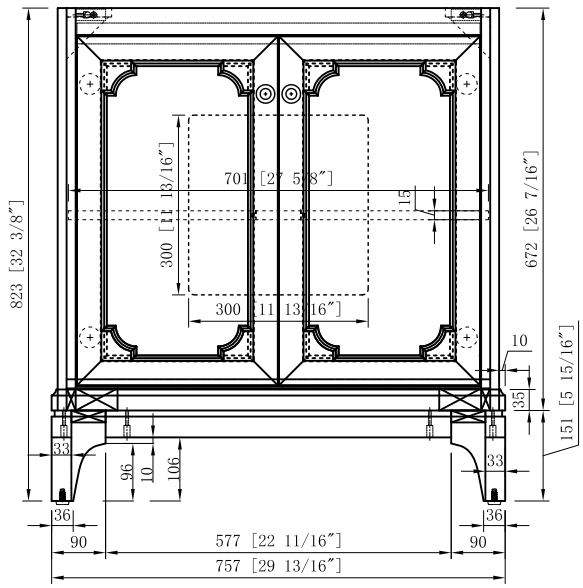
823 [32 3/8″]
701 [27 5/8″]
300 [11 13/16″]
300 [11 13/16″]
15
672 [26 7/16″]
10
35
151 [5 15/16″]
33
96
10
106
33
36
36
90
577 [22 11/16″]
90
757 [29 13/16″]

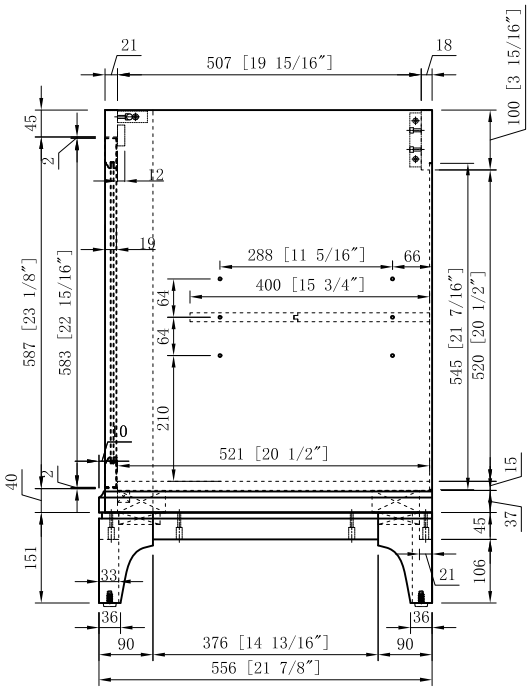
21
507 [19 15/16″]
18
100 [3 15/16″]
45
2
12
19
288 [11 5/16″]
66
400 [15 3/4″]
64
64
587 [23 1/8″]
583 [22 15/16″]
545 [21 7/16″]
520 [20 1/2″]
210
10
521 [20 1/2″]
40
2
15
37
45
151
33
21
106
36
36
90
376 [14 13/16″]
90
556 [21 7/8″]