JEWEL
FAUCET COMPANY

Series J14
Model # 14109

Description
5-Hole Roman tub filler with diverter and handspray.
Made of solid brass.
Made in Italy.

Finishes:

Antique Black	Antique Brass
Antique Copper	Antique Nickel
Brushed Chrome	Brushed Copper
Brushed Nickel	Polished Gold
Flash Black	Oil Rubbed Bronze
Polished Brass	Polished Nickel

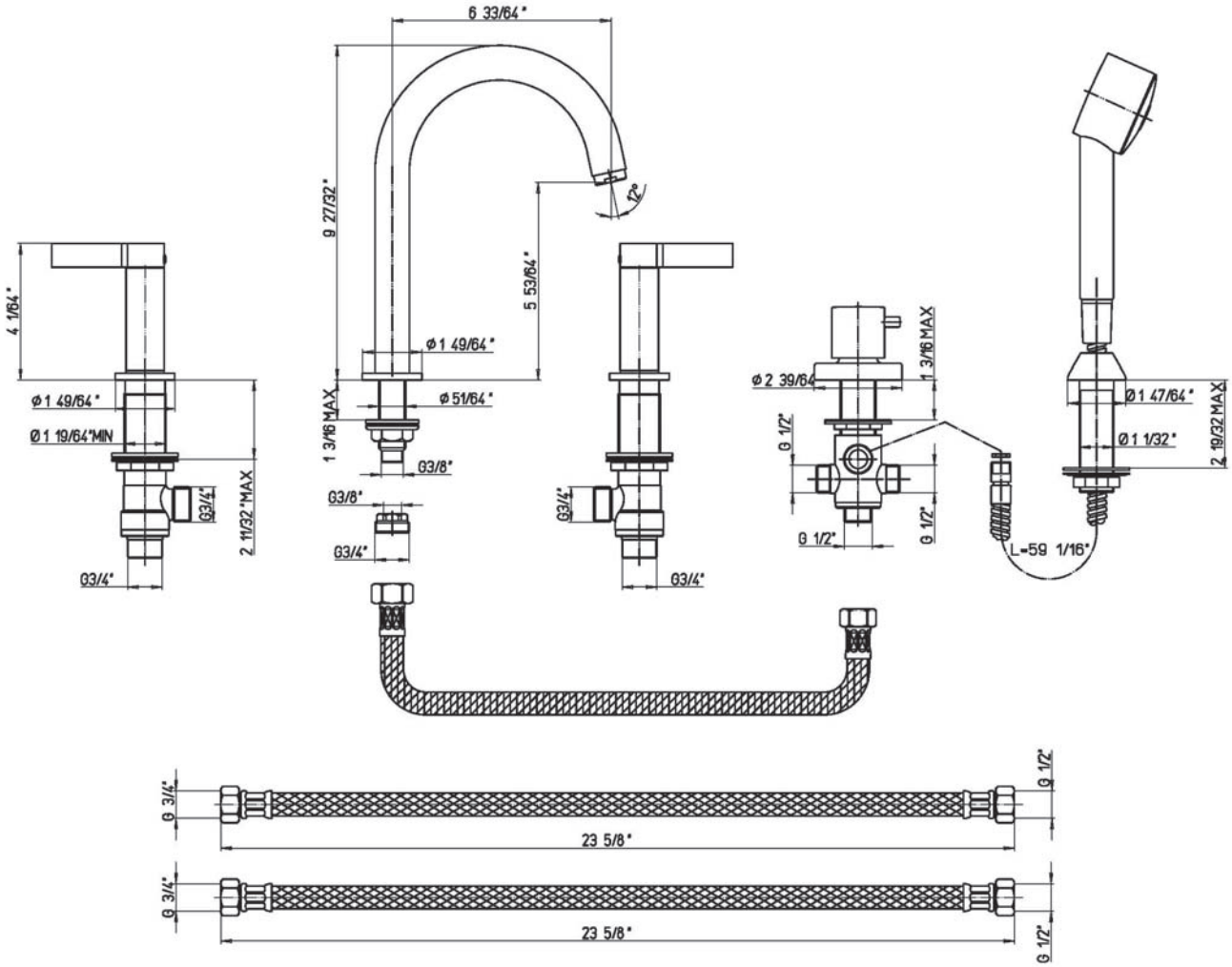

2011 Jewel Faucets Inc.
www.jewelfaucets.com