Wingback Storage Bed

Assembly Instruction

Item AA	1 pc	Item AB	1 pc	Item AC	2 pcs
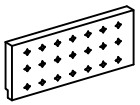 Headboard		Footboard		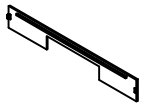 Side Rail	
Item AD	**2 pcs**	**Item AE**	**2 pcs**	**Item AF**	**3 pcs**
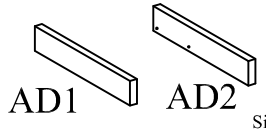 AD1 AD2 Side Wing		L R AE1 AE2 Headboard Leg		Slat	
Item AG	**2 pcs**	**Item AH**	**8 pcs**	**Item AI**	**8 pcs**
Support leg		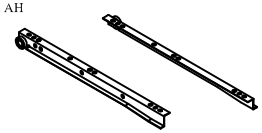 Drawer Slide 500		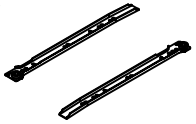 Drawer Slide 500	

Item 1	2 pcs	Item 2	2 pcs	Item 3	2 pcs	Item 4	2 pcs
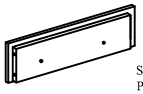 Small Drawer Front Panel		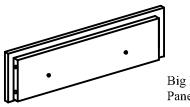 Big Drawer Front Panel		Small Drawer Back Panel		Big Drawer Back Panel	
Item 5	**2 pcs**	**Item 6**	**2 pcs**	**Item 7**	**4 pcs**	**Item 8**	**4 pcs**
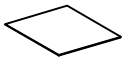 Small Drawer Bottom Panel		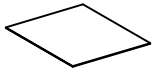 Big Drawer Bottom Panel		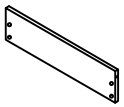 Small Drawer Side Panel		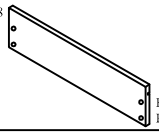 Big Drawer Side Panel	
Item 9	**8 pcs**	**Item 10**	**1 pc**	**Item 11**	**1 pc**	**Item 12**	**2 pcs**
		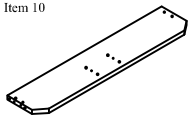		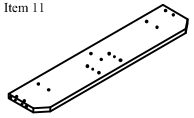			
Item 13	**2 pcs**	**Item 14**	**1 pc**	**Item 15**	**1 pc**	**Item 16**	**1 pc**
Item 17	**1 pc**	**Item 18**	**1 pc**				

Item A	31 pcs	Item B	17 pcs	Item C	14 pcs
Plastic Dowel (8 x 25)		JCBC W M6 x 40		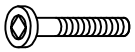 JCBC M6 x 40	
Item D	**52 pcs**	**Item E**	**22 pcs**	**Item F**	**2 pcs**
CSK M3.5 x 16 mm		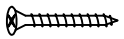 CSK M4 x 32 mm		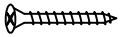 CSK M4 x 38 mm	
Item G	**32 pcs**	**Item H**	**10 pcs**	**Item I**	**10 pcs**
CSK M4 x 50mm		Mini Fix Bolt		Mini Fix Housing	
Item J	**10 pcs**	**Item K**	**52 pcs**	**Item L**	**16 pcs**
Mini Fix Cap		Power Nail ⅝		White Nail Leg	
Item M	**1 pc**	**Item N**	**1 pc**	**Item O**	**6 pcs**
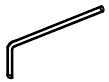 Allen Key 70 mm		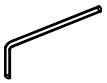 Allen Key 65 mm		Spring Washer	
Item P	**4 pcs**	**Item Q**	**2 pcs**		
Flat Washer		Angle Bracket			

Step 1 The way to assemble the big drawer and small drawer is the same !! Step 1 until Step 5 !!

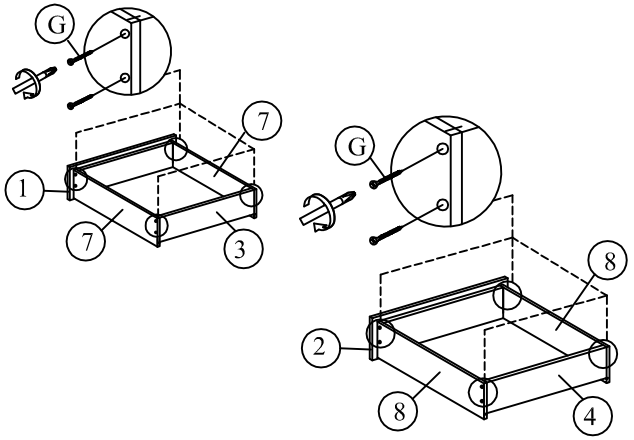

Step 2

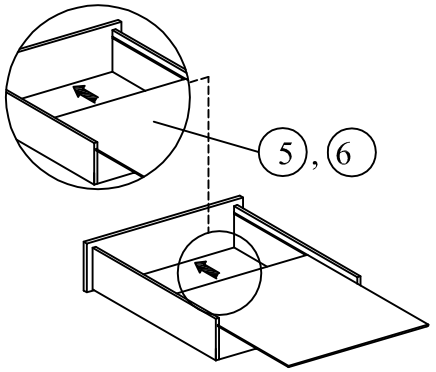

Step 3

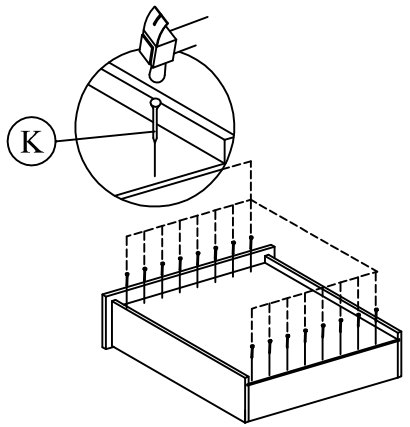

Step 4

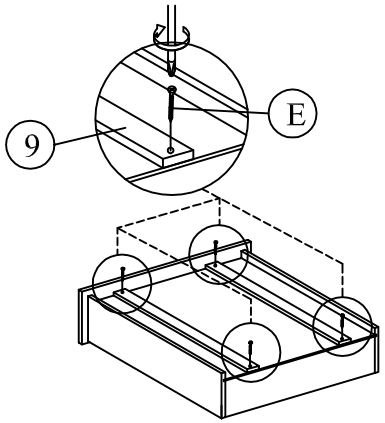

Step 5

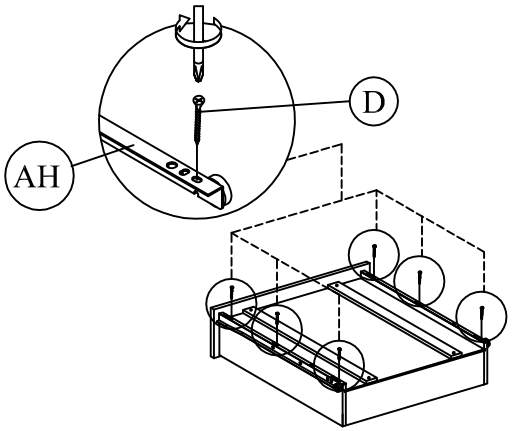

Step 6

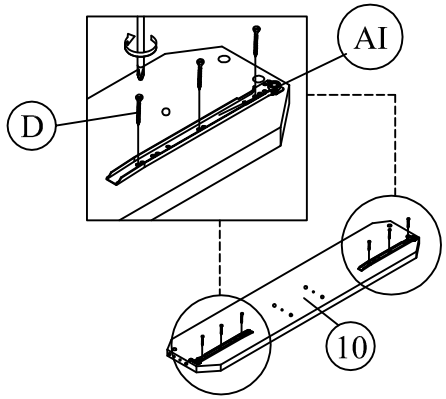

Step 7

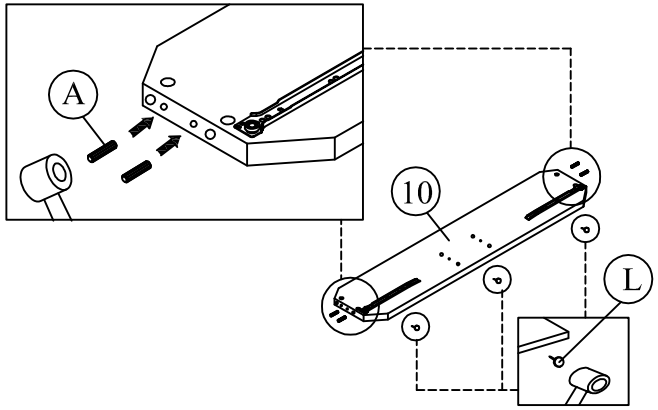

Step 8

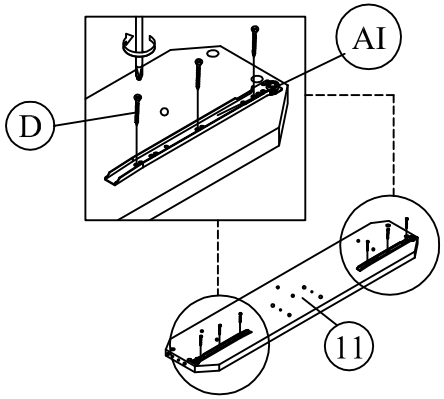

Step 9

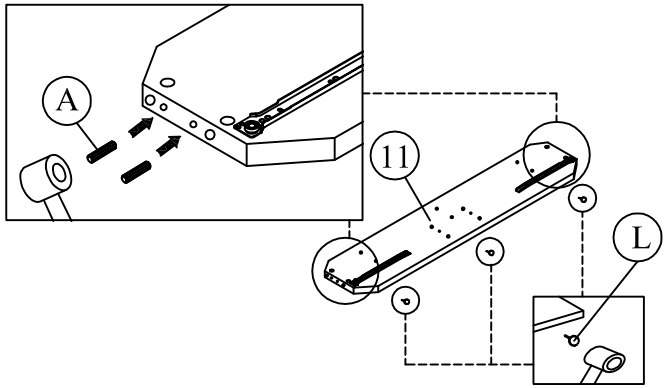

Step 10

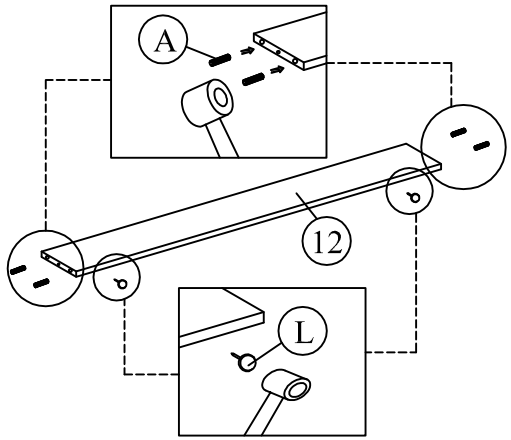

Step 11

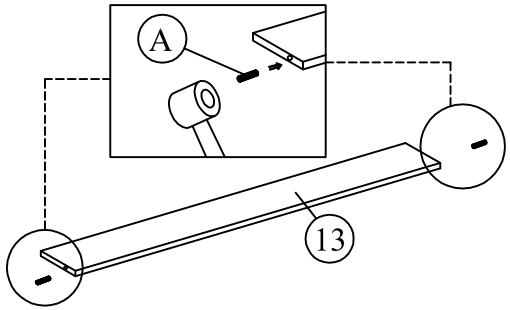

Step 12

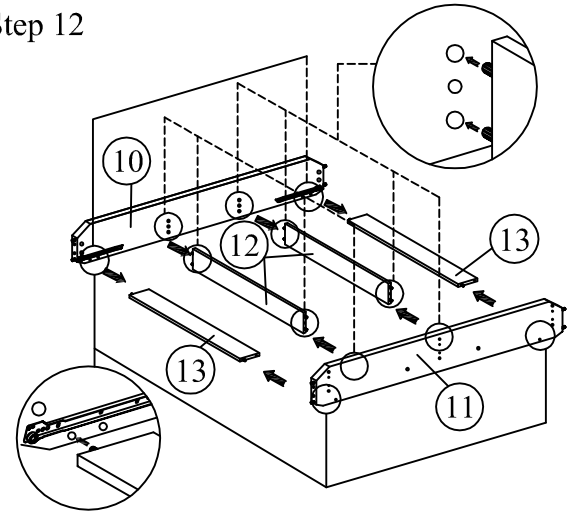

Step 13

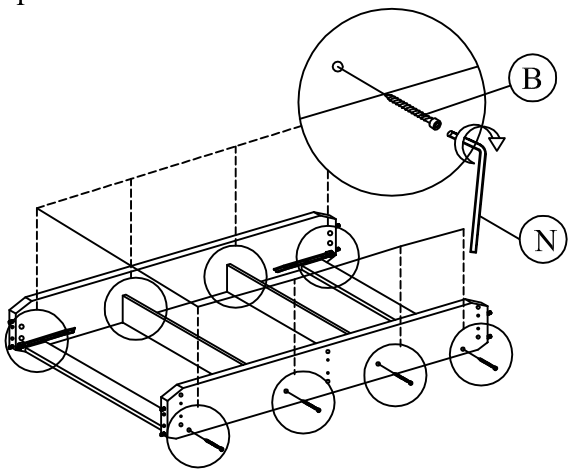

Step 14

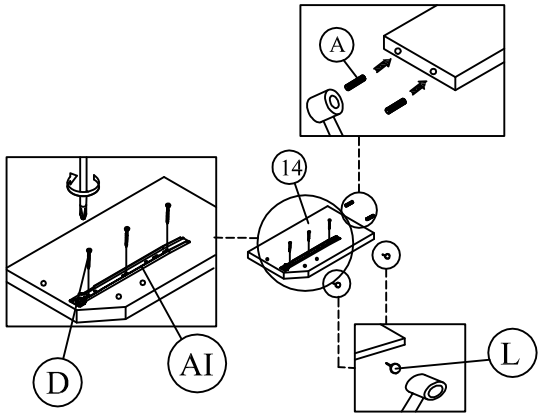

Step 15

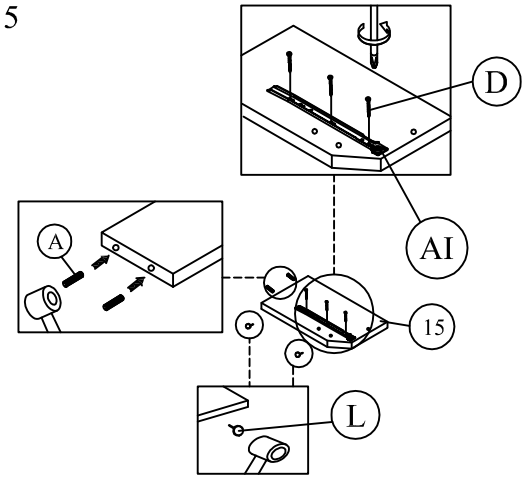

Step 16 Attach (AI) to (16) and tighten it with (D), the flip (AI) to the other side and repeat the same step.

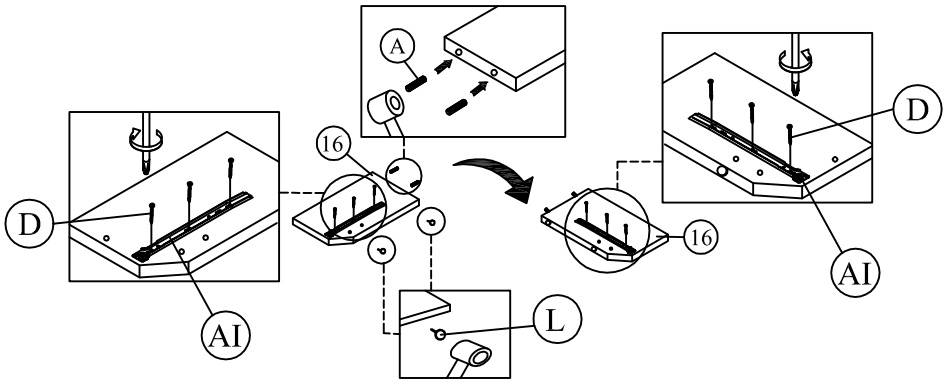

Step 17

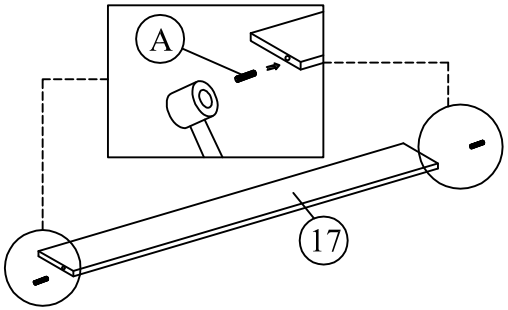

Step 18

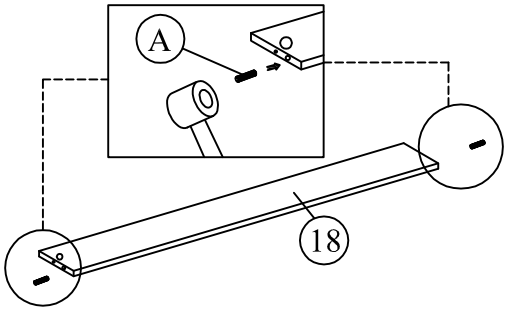

Step 19

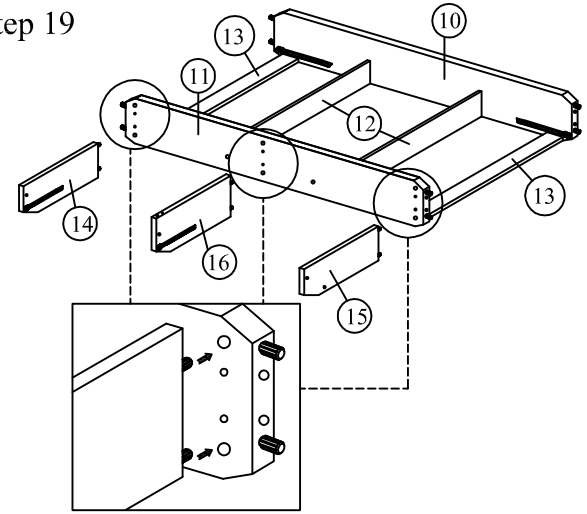

Step 20

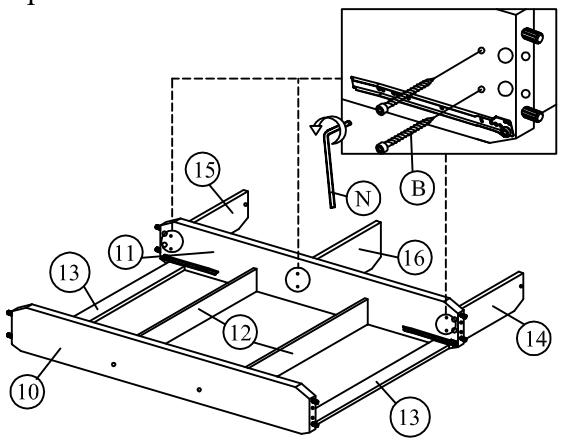

Step 21

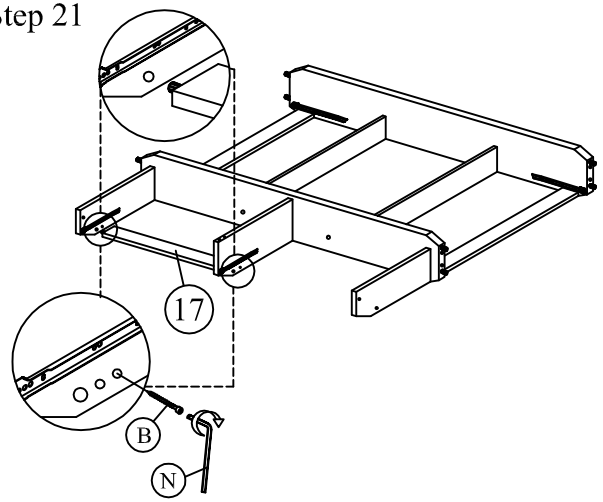

Step 22

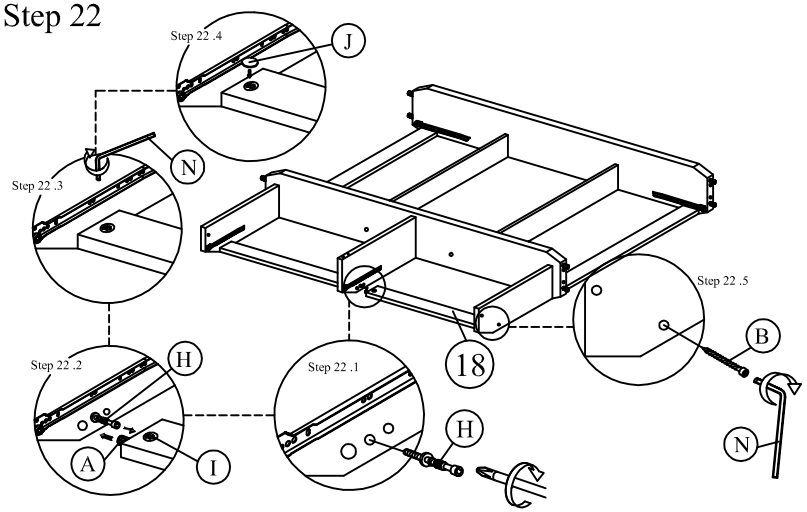

Step 23

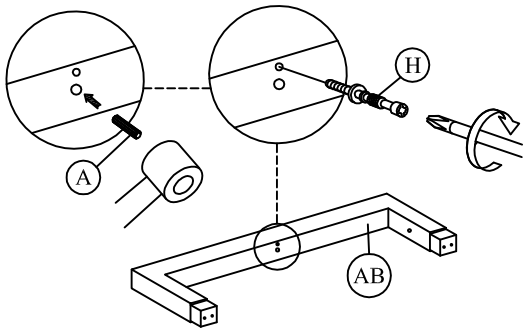

Step 24

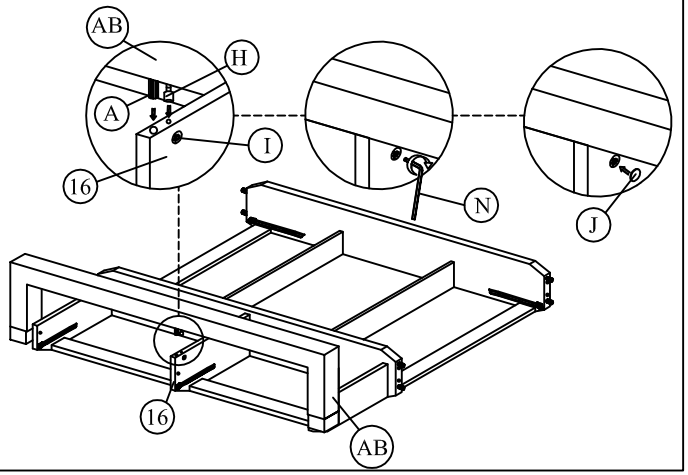

Step 25

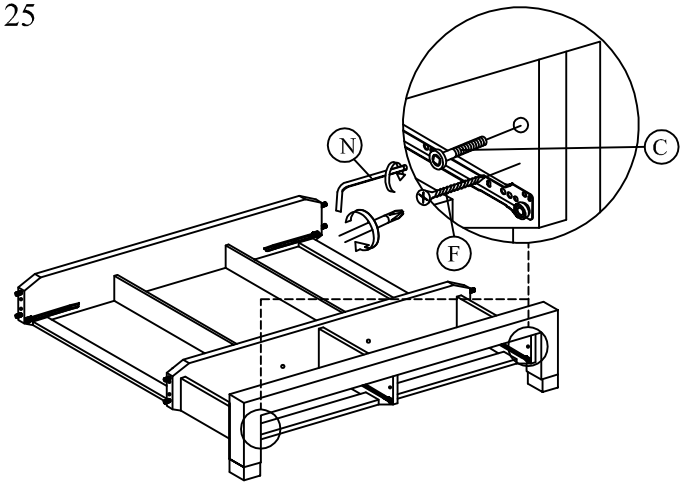

Step 26

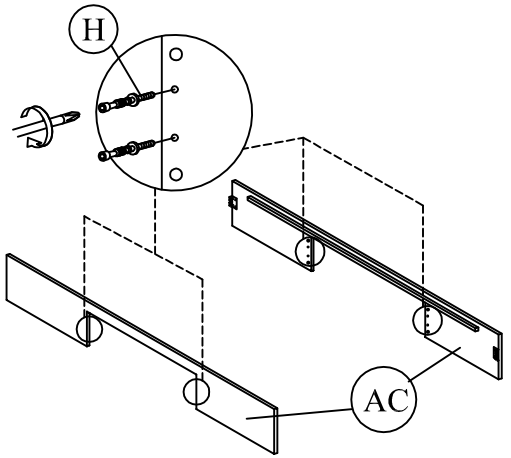

Step 27

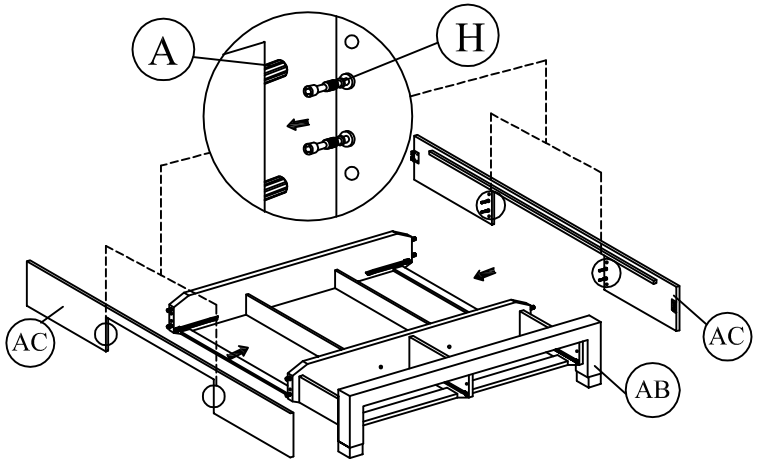

Step 28

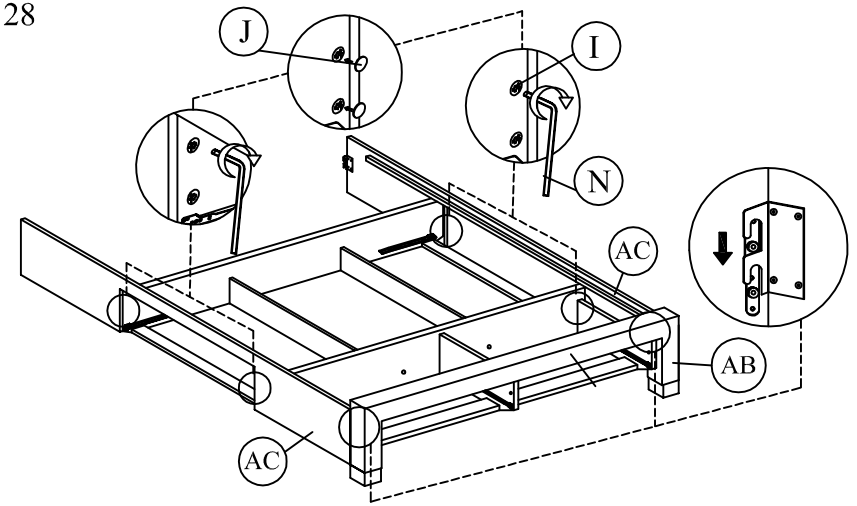

Step 29

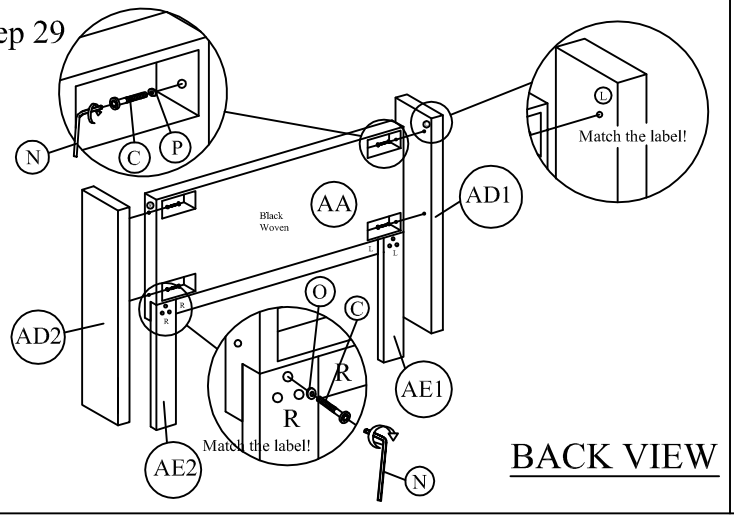

BACK VIEW

Step 30

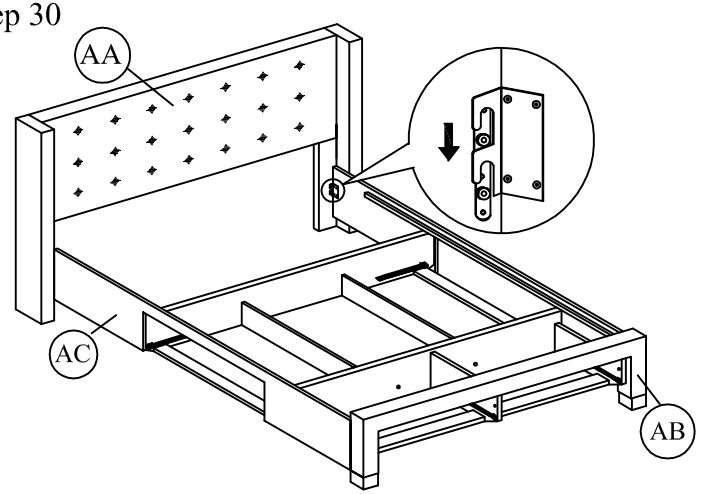

Step 31

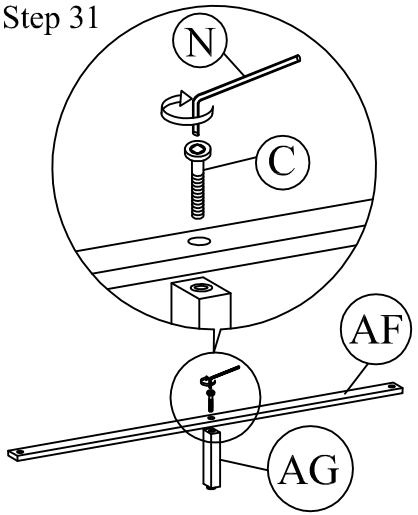

Step 32

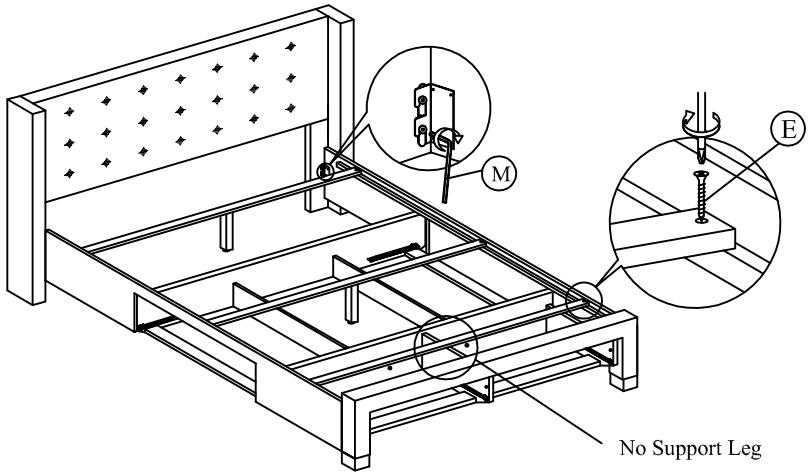
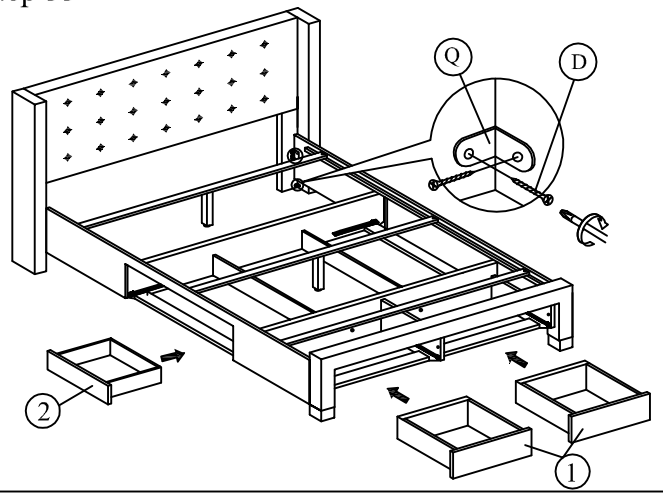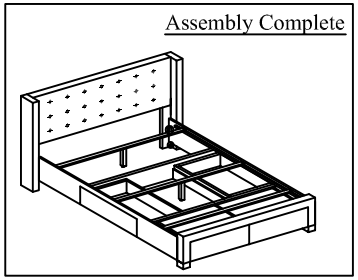
Step 33